OPERATING INSTRUCTIONS

AND PARTS BOOK

CONSEW

BLINDSTITCH MACHINE SERIES

1099, 1118 & 1118L SERIES

CONSEW

CONSOLIDATED SEWING MACHINE CORP.

INDUSTRIAL SEWING EQUIPMENT

	MODEL	DESCRIPTION
1	1099PB	1 to 1 Ratio – Nonskip Stitch Narrow Cylinder – No Work Plate for Pants Bottom
2	1099-2M	1 to 1 Ratio – Nonskip Stitch Narrow Cylinder Swing-Away Work Plate For Medium Weight Fabrics
3	1099-2L	1 to 1 Ratio – Nonskip Stitch Narrow Cylinder Swing-Away Work Plate For Light Weight Fabrics
4	1099-2H	1 to 1 Ratio – Nonskip Stitch Narrow Cylinder Swing-Away Work Plate For Heavy Weight Fabrics
5	1099-2K	1 to 1 Ratio – Nonskip Stitch Narrow Cylinder Swing-Away Work Plate For Knit Fabrics
6	1099-9	1 to 1 Ratio – Nonskip Stitch Narrow Cylinder – Large Stationary Work Plate For Draperies
7	1099-9E	1 to 1 Ratio – Nonskip Stitch Narrow Cylinder Extra Large Stationary Work Plate For Bedspreads
8	1118-2M	2 to 1 & 1 to 1 Ratio – Skip & Nonskip Narrow Cylinder Swing-Away Work Plate For Medium Weight Fabrics
9	1118-2L	2 to 1 & 1 to 1 Ratio – Skip & Nonskip Narrow Cylinder Swing-Away Work Plate For Light Weight Fabrics
10	1118-2H	2 to 1 & 1 to 1 Ratio – Skip & Nonskip Narrow Cylinder Swing-Away Work Plate For Heavy Weight Fabrics
11	1118-2K	2 to 1 & 1 to 1 Ratio – Skip & Nonskip Narrow Cylinder Swing-Away Work Plate For Knit Fabrics
12	1118-9	2 to 1 & 1 to 1 Ratio – Skip & Nonskip Narrow Cylinder Large Stationary Work Plate For Draperies
13	1118-9E	2 to 1 & 1 to 1 Ratio – Skip & Nonskip Narrow Cylinder Extra Large Stationary Work Plate For Bedspreads
14	1118L-2M	Same as 1118-2M Except with Lubrication
15	1118L-2L	Same as 1118-2L Except with Lubrication
16	1118L-2H	Same as 1118-2H Except with Lubrication
17	1118L-2K	Same as 1118-2K Except with Lubrication
18	1118L-9	Same as 1118-9 Except with Lubrication
19	1118L-9E	Same as 1118-9E Except with Lubrication

INDEX

MOUNTING MACHINE

1. Fasten machine to table using felt pad. Tighten screws evenly, turning each a little at a time.
   - **a.** When an individual motor and clutch unit is employed, it is recommended that the motor be rated at 1/3 HP and 1725/1750 RPM. On all standard models, use a 3½" outside diameter pulley. On models intended for alteration, use a 2½" outside diameter pulley.
   - **b.** When the machine is mounted on a power table, a 4" pulley should be used. If possible, when using such stands, the machine should be mounted TO AVOID CROSSING THE BELT.
   - **c.** The maximum machine speed recommended for any installation is 3000 RPM, unless otherwise specified.
2. The handwheel's direction of rotation is away from the operator. It rotates in a **clockwise** direction when looking at the face of the wheel pulley, as shown by the arrow.
3. Either V-belting or round leather belting may be used. Excessive tension of belt will cause over-heating and freezing of bearing at handwheel.

CAUTION: BEFORE OPERATING MACHINE, LUBRICATE IN ACCORDANCE WITH INSTRUCTIONS. REFER TO OIL CHART.

1. Place a few drops of oil at all points shown on the oiling chart All moving parts MUST be oiled.
2. In production use, the machine should be oiled twice daily

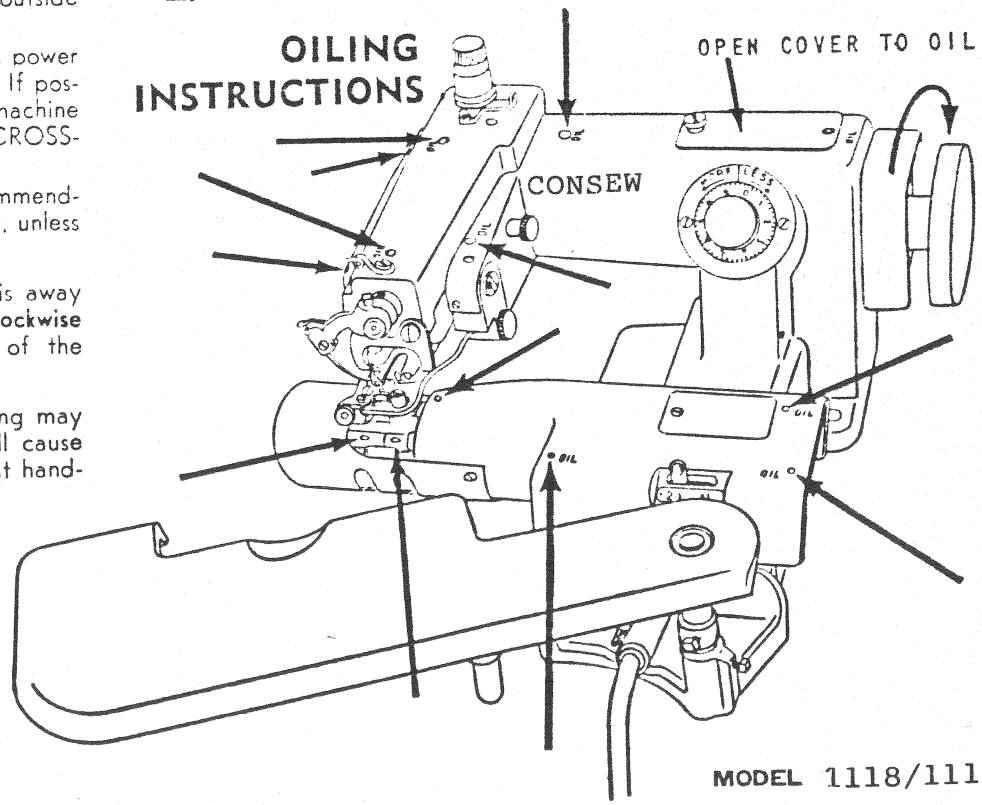

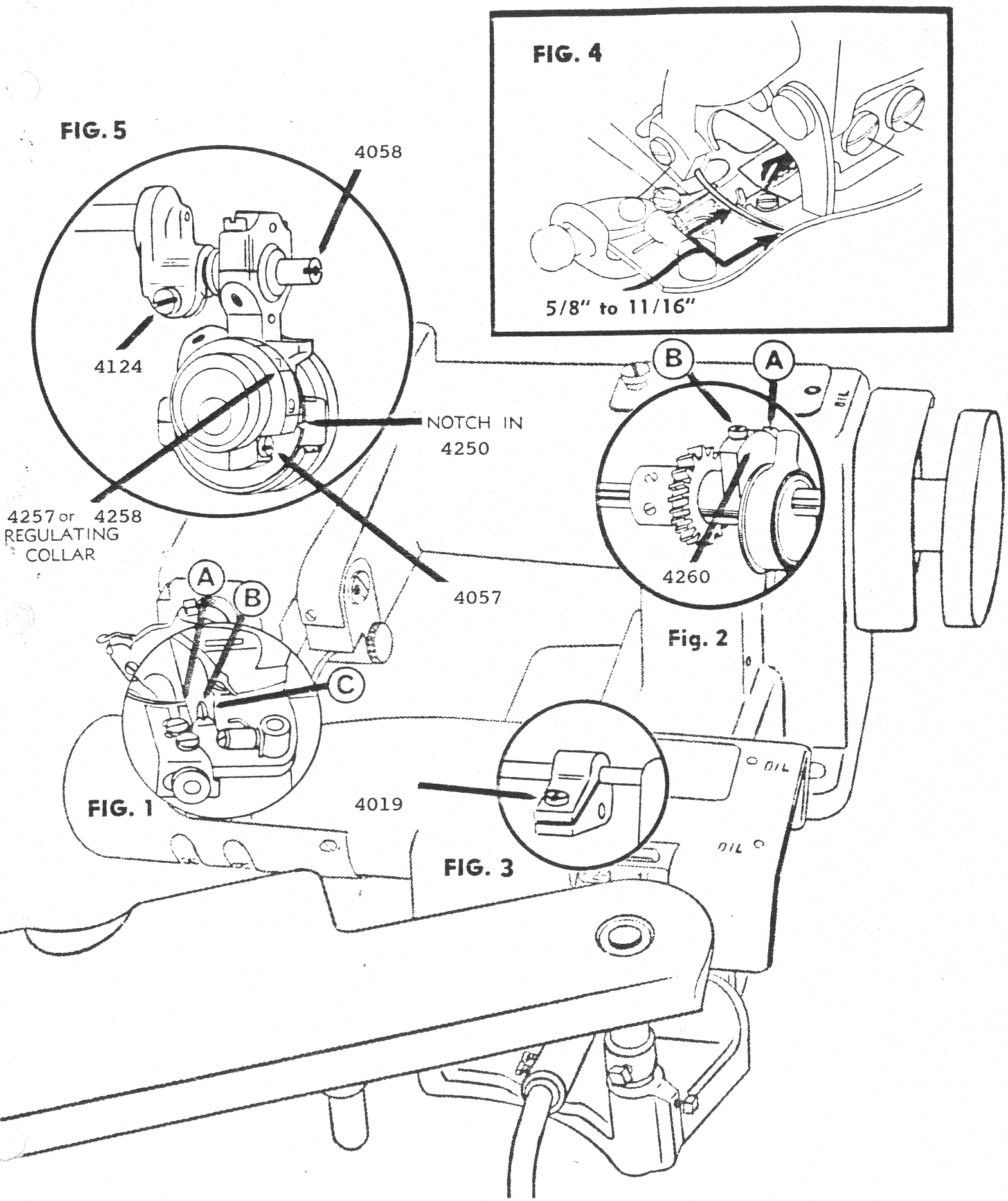
FIG. 4
5/8" to 11/16"
FIG. 5
4058
4124
NOTCH IN
4250
4257 or 4258
REGULATING
COLLAR
4057
B
A
4260
Fig. 2
A
B
C
FIG. 1
4019
FIG. 3
OIL
OIL
OIL

RIB FOR VARIOUS MODELS AS INDICATED

Model	Rib	Model	Rib	Model	Rib	Model	Rib
Light Wt.		Medium Wt.		Hvy.Wt.		Knits	
1118 1118L 1099	4371	1118 1118L 1099	4354	1118 1118L 1099	4356	1118 1118L 1099	4368

FEED FRAME 1118

GROUP 1

4140	Window Plate
6031-6032	Screw - Window Plate
4120	Rib Shaft Bushing - Left
4121	Rib Shaft Bushing - Right
4129	Set Screw — Platten Bracket Pivot Stud
4046	Screw - Spring Link Lock
4112	Screw - Feed Frame Limit
4113	Nut - Feed Frame Limit Screw Lock

GROUP 2

4113	Nut - Skip Stitch Compensating
4118	Screw - Skip Stitch Compensating
4114	Skip Regulating Lever
4116	Spring Washer - Skip Regulating Lever Stud
4115	Stud - Skip Regulating Lever
4124	Screw - Skip Regulating Lever Stud-Lock

GROUP 3

RIB — See Chart Top of Page

4017	Crank - Rib Shaft
4019	Screw - Rib Shaft Crank - Clamp
4018	Stud - Rib Shaft Crank
4123	Rib Shaft Collar - Left
4124	Screw - Rib Shaft Collar-Clamp
4125	Rib Shaft Collar - Right
4124	Screw - Rib Shaft Collar-Clamp

GROUP 4

4128	Stud - Platten Bracket Pivot
4126	Platten Bracket - Left
4127	Platten Bracket - Right
4130	Platten - Left
4131	Platten - Right
4136	Screw - Platten to Bracket - Attaching
4137	Nut - Platten to Bracket Attaching Screw
4135	Nut - Platten Bracket Limit Screw-Lock
4134	Screw - Platten Bracket Limit
4132/4133	Spring - Platten Bracket
4233	Spacer - Platten Bracket

GROUP 5

4138	Cylinder
4139	Screw - Cylinder

IMPORTANT

For CONSEW Semi-Self Oiler Models 1118L Series use same part numbers as 1118 but add prefix "L".

RIB - SEE CHART TOP OF PAGE 10

GROUP 3 (4019) (4017) (4123) (4125) (4018) (4124) (6031-C2) (4140) (4121) (4120) (4110) (4114) (4424) (4415) (4416) (4418) (4413) (4046) (4412) (4429) (4437) (4233) (4435) (4434) (4453) (4126) (4132) (4135) (4136) (4137) (4130) (4131) (4127) (4139) (4138) (4123) (4139)

GROUP 1 GROUP 2 GROUP 4 GROUP 5

FEED FRAME GROUP

1118 SERIES

(4110) Feed Frame with (4120) and (4121)

(4205) Feed Frame (Narrow) with (4120) and (4121)

IMPORTANT

Ordinarily, machines have this narrow cylinder, but thicker cylinder No. as illustrated above is installed on order without any additional charge.

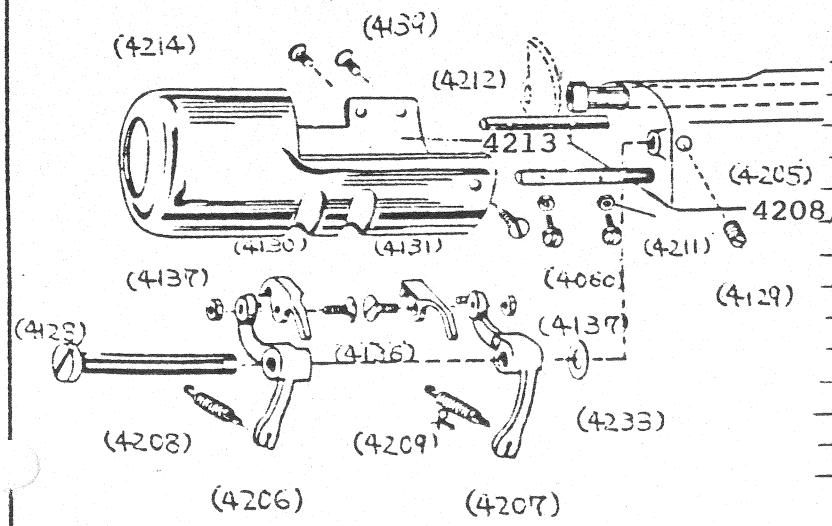

NARROW CYLINDER MACHINES SERIES

4128	Stud - Platten Bracket Pivot
4206	Platten Bracket - Left
4207	Platten Bracket - Right
4130	Platten - Left
4131	Platten - Right
4136	Screw Platten to Bracket
4137	Nut - Platten to Bracket Screw
4208/4209	Spring - Platten Bracket
4233	Spacer - Platten Bracket
4212	Spring Post
4213	Stop Post
4060	Screw - Platten Bracket-Limit
4211	Nut - Platten Bracket Limit-Screw Lock
4214	Cylinder
4139	Screws - Cylinder
4129	Set Screw — Platten Bracket Pivot Stud

MAIN FRAME GROUP

IMPORTANT

For CONSEW Semi-Self Oiler Models 1118L Series use same part numbers as 1118 but add prefix "L".

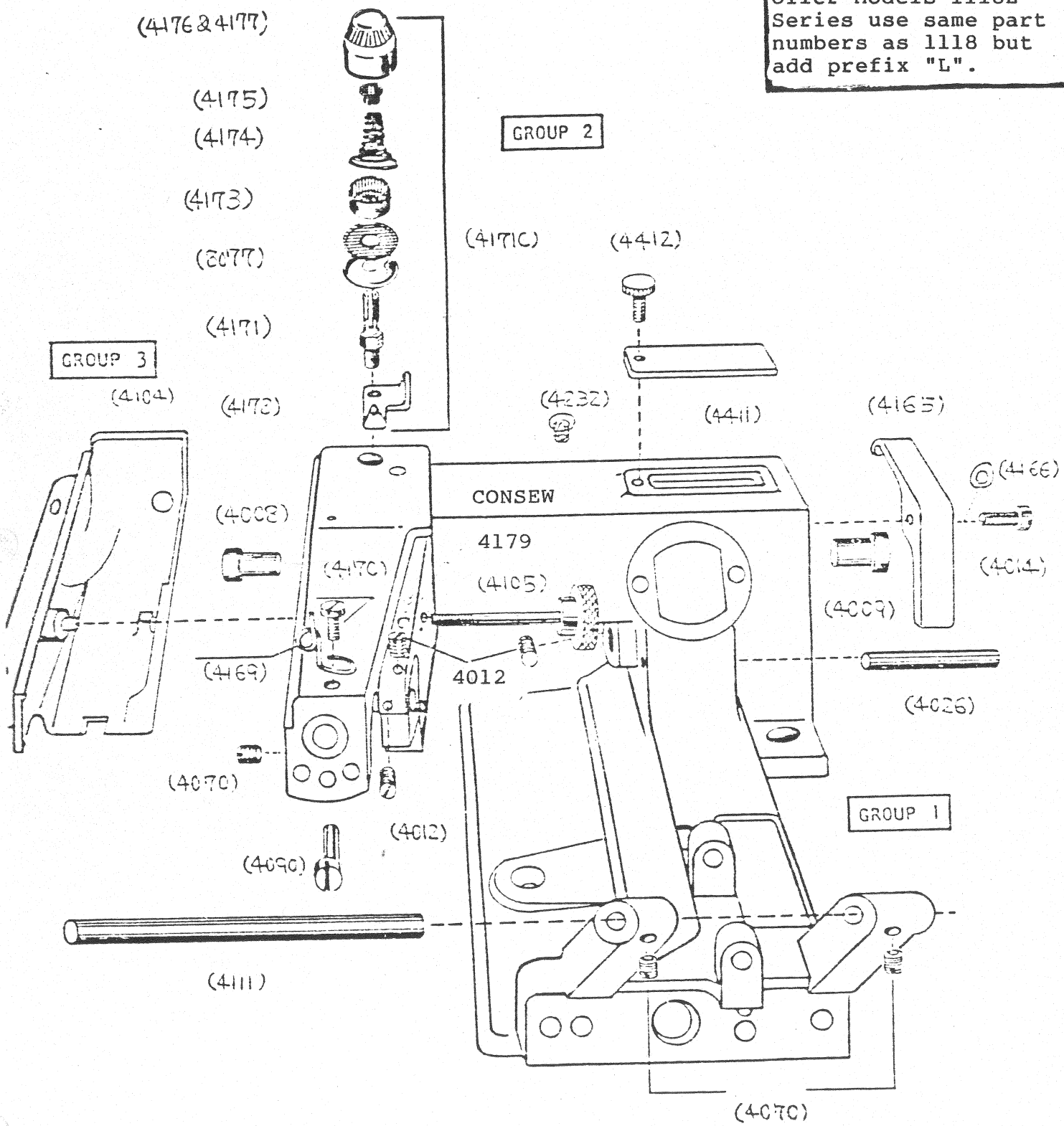

4079 Cotter Pin (03x20)

4116 Washer for 4014

4232 Rubber Packing

MAIN FRAME GROUP

GROUP 1

4111	Shaft - Feed Frame Rocker
4070	Set Screw - Feed Frame Shaft
4026	Pin - Regulating Fork-Pivot
4009	Main Shaft Bushing - Right
4008	Main Shaft Bushing - Left
4165	Belt Guard
4014	Set Screw - Belt Guard
4411	Cover Plate
4412	Screw - Cover Plate
4090	Eccentric Pin
4070	Screw - Eccentric Pin Set
4012	Screw - Eccentric Block

GROUP 2

417C	Tension Assembly, Complete
4178	Thread Guide
4171	Tension Post
8077	Tension Discs
4173	Cover
4174	Spring
4175	Ratchet
4176/4177	Nut
4169	Front Thread Guide
4170	Screw - Front Thread Guide

GROUP 3

4104	Side Cover
4105	Screw - Side Cover

MAIN SHAFT GROUP

GROUP 1

	Main Shaft 4007 (1118L), 4405 (1118)
4015	Gear - Skip Stitch Drive (4020C)
4012	Screw - Skip Stitch Drive Gear Set
4260C	Group 2, Fitted & Lapped 1118
4016	Rib Connection Lever
4124	Screw - Rib Connecting Lever Clamp
4260	Rib Connection Eccentric
4014	Screw - Rib Lever Eccentric
4010	Handwheel
4011	Screw - Handwheel Set (Cone Point)
4012	Screw - Handwheel Set
4250S	Group 4, Fitted and Lapped
4250	Needle and Feed Eccentric
4250	Set Screw - (Cone Point) Feed Eccentric
4129	Screw - (Flat) Eccentric Set-Lock
4056	Needle Shaft and Feed Connection
4058	Eccentric Ball Stud
4057	Screw - Needle Connection
4059	Eccentric Ball Guard
4060/4224	Screw - Eccentric Ball Guard
4013	Wick - Main Shaft
8009	Screw - Main Shaft - Wick

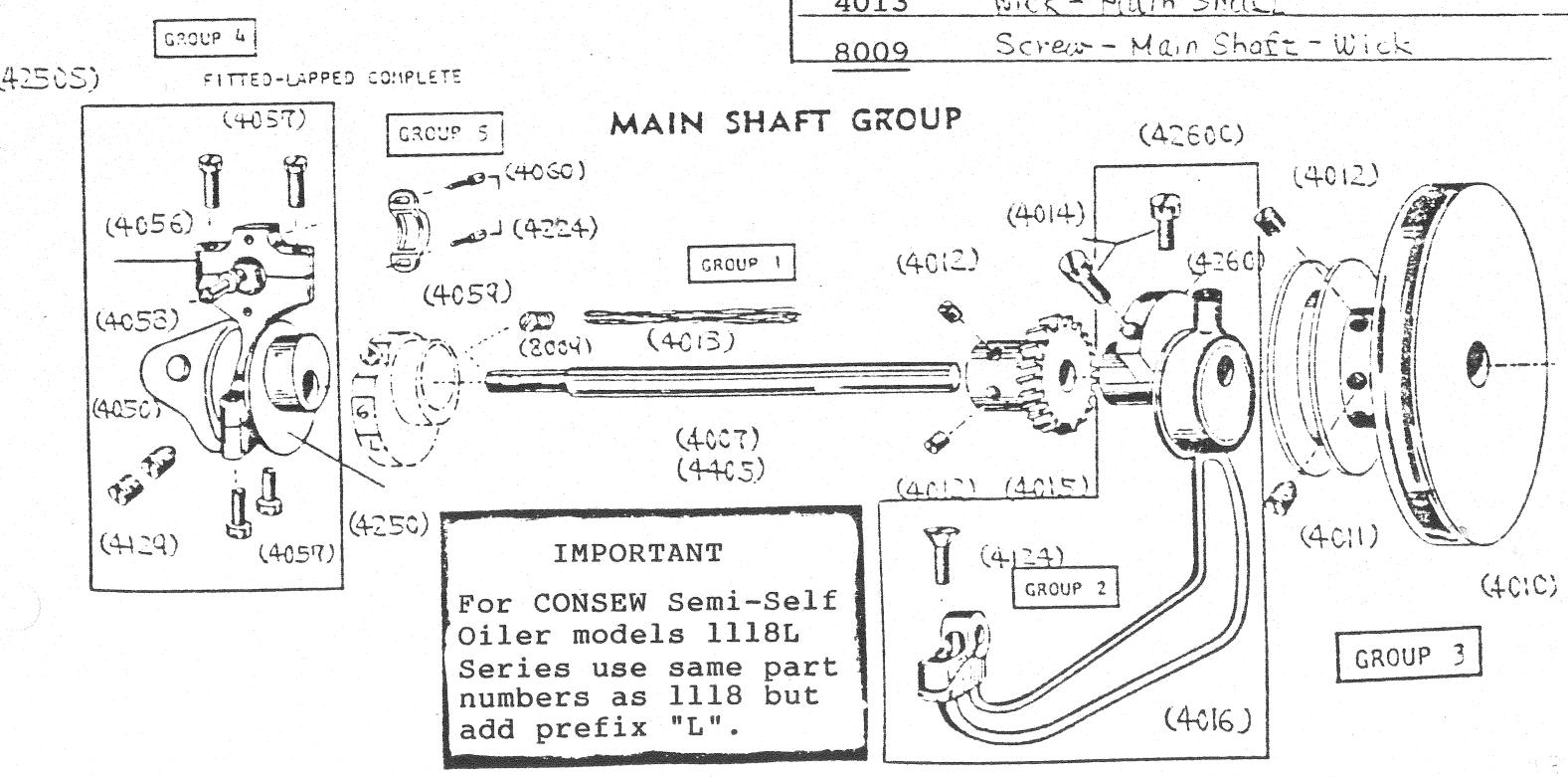

IMPORTANT

For CONSEW Semi-Self Oiler models 1118L Series use same part numbers as 1118 but add prefix "L".

FRONT PLATE FOR INFANTS WEAR

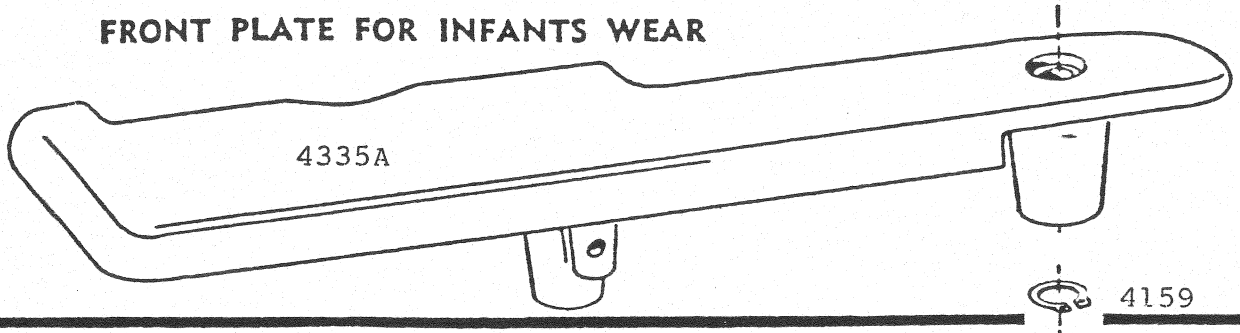

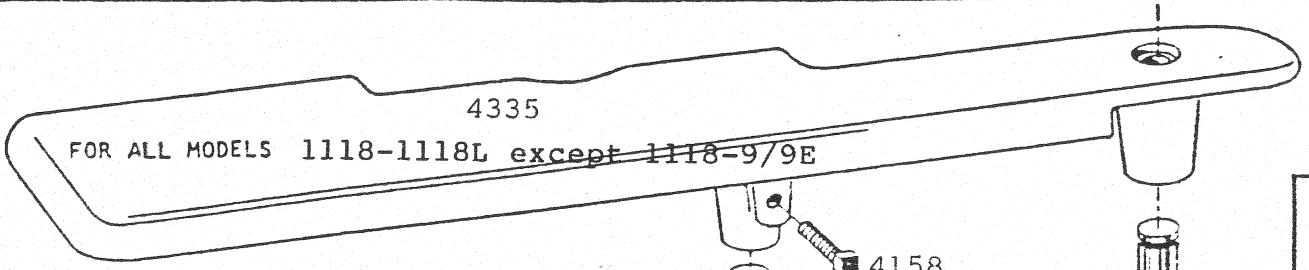

THESE BRACKET PARTS FOR ALL SWING PLATES

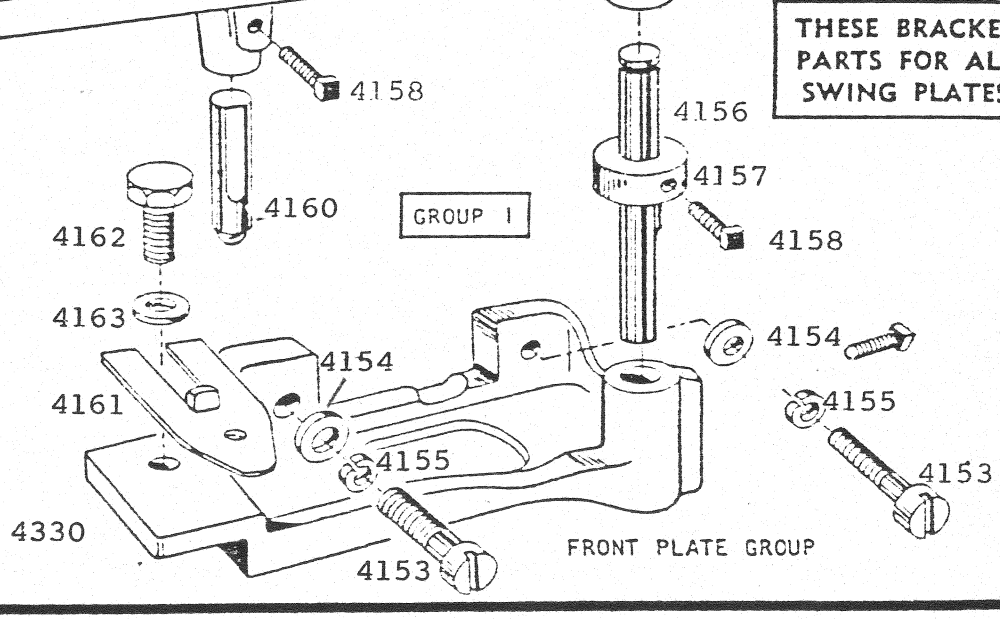

COMPLETE PLATE AND BRACKET ASSEMBLY
FOR ALL 1118 Models
Use No. 4335C

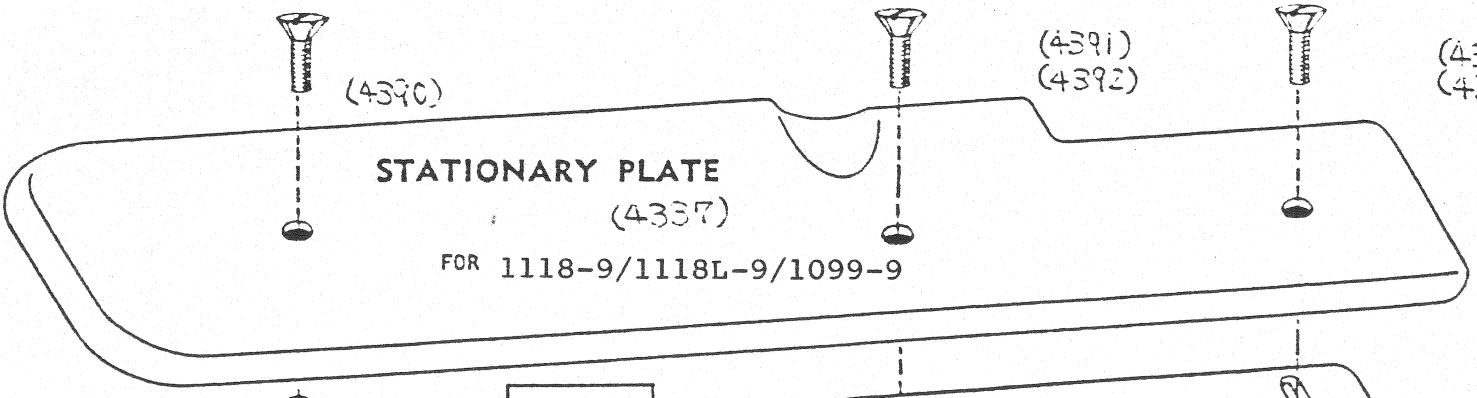

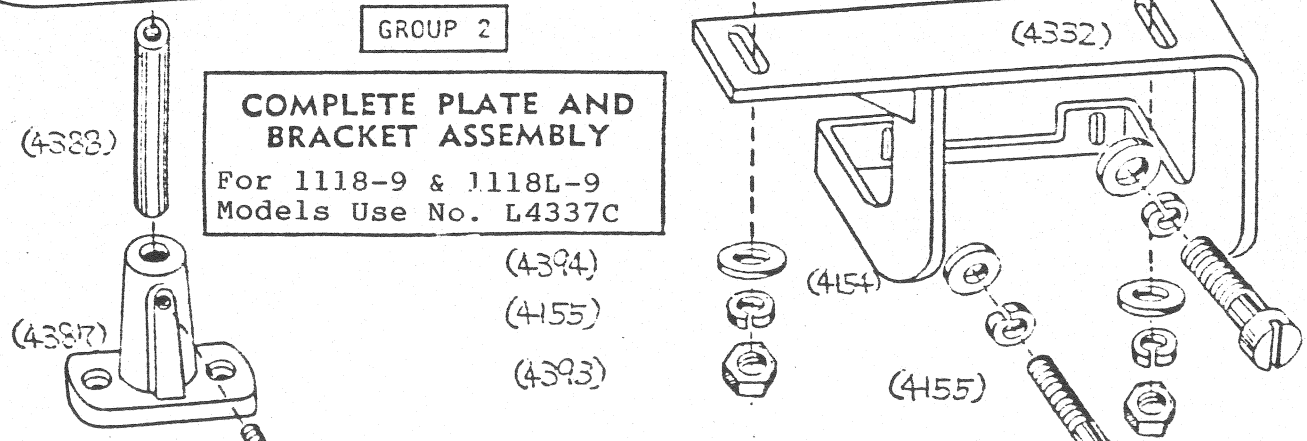

COMPLETE PLATE AND BRACKET ASSEMBLY
For 1118-9 & 1118L-9 Models Use No. L4337C

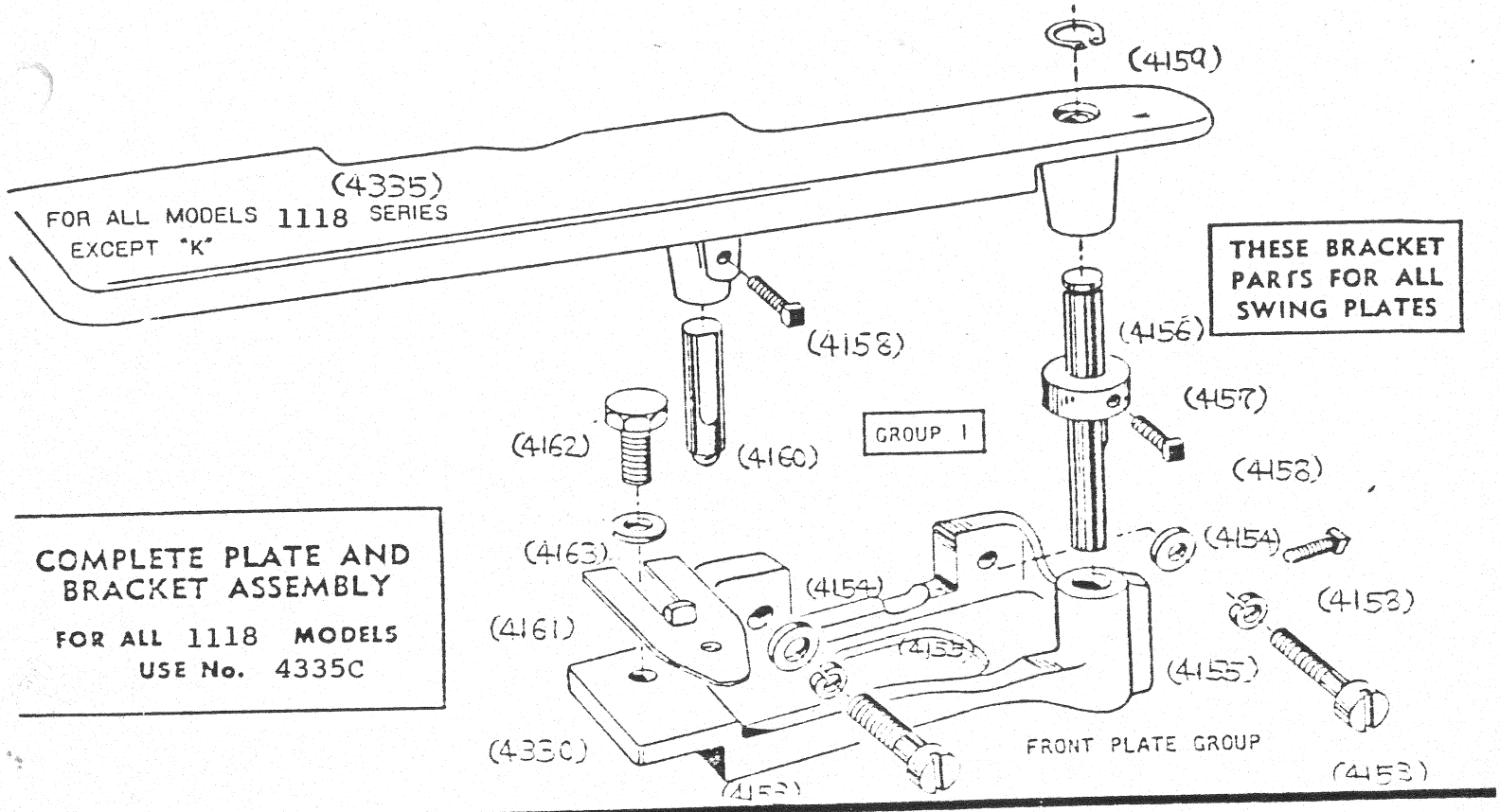

FRONT PLATE GROUP AND SUPPORT BRACKETS

GROUP 1

	4335C	Complete Plate and Bracket Assembly 1118/1118L
	4335C	Complete Plate and Bracket Assembly 1118L
	4335	Swing Plate 1118/1118L
	4335	Swing Plate 1118L
	4160	Support Shaft Assembly
	4158	Screw - Pivot Pin-Lock
	4330	Bracket - Swing Plate-Support
	4162	Screw - Stop Plate
	4163	Washer - Stop Plate Screw
	4161	Stop Plate
	4154	Washers (Flat) - Swing Plate Support Bracket Screw
	4155	Washers (Lock) - Swing Plate Support Bracket Screw
	4153	Screw - Swing Plate Support Bracket
	4154	Washer (Flat) - Swing Plate Support Bracket Screw
	4155	Washer (Lock) - Swing Plate Support Bracket Screw
	4153	Screw - Swing Plate Support Bracket
	4156	Pin - Swing Plate Pivot
	4159	Retaining Ring - Swing Plate Pivot Pin
	4157	Collar - Swing Plate Pivot Pin
	4158	Set Screw - Swing Plate Pivot Pin Collar
	4159	Screw - Swing Plate Pivot Pin Lock

FRONT PLATE GROUP AND SUPPORT BRACKETS

(Except Models 1118-9/9E, 118L-9/9E and 1099-9/9E)

GROUP 1

	Complete Plate and Bracket Assembly (1118/1118L/1099)
	Complete Plate and Bracket Assembly 1118L
4335	Swing Plate (1118/1099
	Swing Plate 1118L
4335A	Swing Plate For Infants Wear
4160	Support Shaft Assembly
4158	Screw - Pivot Pin-Lock
4330	Bracket - Swing Plate-Support
4162	Screw - Stop Plate
4163	Washer - Stop Plate Screw
4161	Stop Plate
4154	Washers (Flat) - Swing Plate Support Bracket Screw
4155	Washers (Lock) - Swing Plate Support Bracket Screw
4153	Screw - Swing Plate Support Bracket
4154	Washer (Flat) - Swing Plate Support Bracket Screw
4155	Washer (Lock) - Swing Plate Support Bracket Screw
4153	Screw - Swing Plate Support Bracket
4156	Pin - Swing Plate Pivot
4159	Retaining Ring - Swing Plate Pivot Pin
4157	Collar - Swing Plate Pivot Pin
4158	Set Screw - Swing Plate Pivot Pin Collar
4158	Screw - Swing Plate Pivot Pin-Lock

GROUP 2 **Models** 1118-9/1118L-9/1099-9

4337C	Complete Plate and Bracket Assembly 1118-9/1118L-9)
4337	Stationary Plate (1118-9/1118L-9 and 1099-9)
4332	Bracket Stationary Plate
4391 or 4392	Screw - Stationary Plate to Bracket
4394	Washer (Flat) - Plate Screw
4155	Washer (Lock) - Plate Screw
4393	Nut - Plate Screw
4154	Washer (Flat) - Bracket Support
4155	Washer (Lock) - Bracket Support
4153	Screw - Bracket Support
4387	Support - Stationary Plate
4388	Extension Support, Adjustable
4389	Screw - Extension Support, Lock
4390	Screw - Plate to Support

SPECIAL GUIDE AND GAUGE WHERE NECESSARY FOR MATERIAL THAT IS HARD TO KEEP UNCURLED, SUCH AS NYLON TRICOT.

PRESSERFOOT GROUP

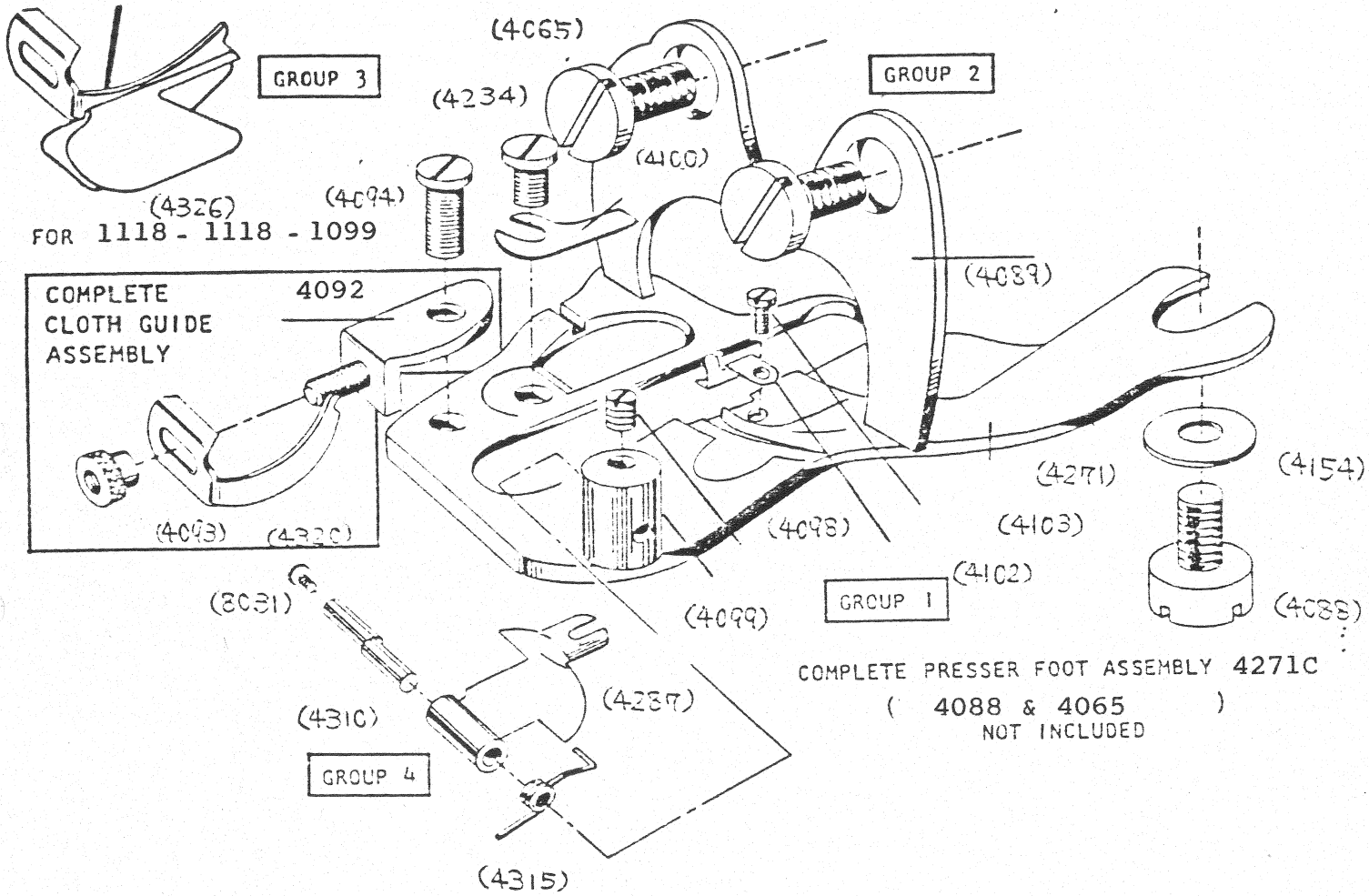

Model	Presser Foot Complete	(Presser) (Foot)	(Presser) (Foot) (Shoe)	Stitch Regulating Collar	Cloth Guide	Rib
M	44C (4271C)	(2301 (4271))	(2501 (4287))	1091 (4257)	2600 (4320)	6010 (4354)
L	44A (4270C)	(2303 (4270))	(2503 (4285))	1091 (4257)	2600 (4320)	6036 (4371)
H	44C (4271C)	(2301 (4271))	(2501 (4287))	1092 (4258)	2600 (4320)	6032 (4368)
K	44C (4271C)	(2301 (4271))	(2501 (4287))	1092 (4258)	2606 (4324)	6032 (4368)

LOOPER ROD FORK SLEEVE ASSEMBLY — 4052S

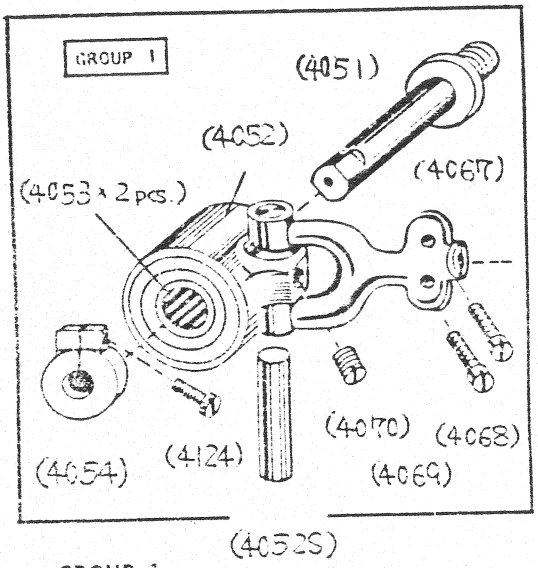

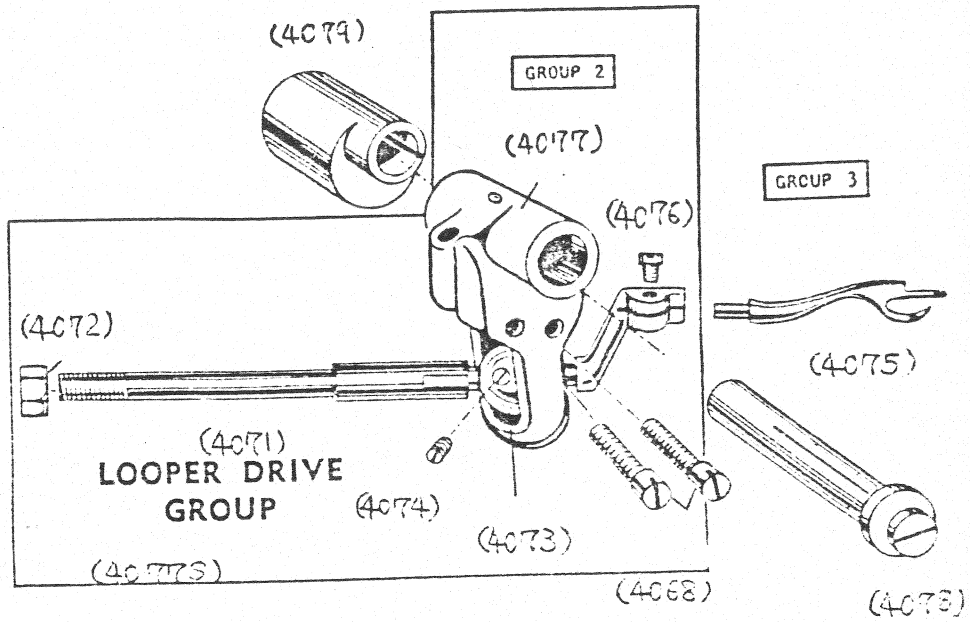

GROUP 1	
4052S	Looper Rod Fork and Sleeve Assembly
4067	Looper Rod Fork
4052	Looper Rod Sleeve
4069	Pin - Fork and Sleeve
4070	Set Screw - Fork and Sleeve Pin
4051	Stud - Looper Rod Sleeve
4054	Collar - Sleeve Stud
4124	Screw - Stud Collar
4068	Screw - Looper Rod Fork-Clamp
4053	Bearing (2 pcs.) - Looper Rod Sleeve

GROUP 2	
4077S	Looper Rod and Carrier Complete (1118)
4077	Looper Rod Carrier
4073	Looper Rod Ball
4074	Set Screw - Looper Rod Ball
4071	Looper Rod
4072	Nut - Looper Rod-Lock
4076	Screw - Looper Clamp
4068	Screw - Looper Rod Carrier-Clamp

GROUP 3	
4078	Stud - Looper Rod Carrier
4079	Eccentric Block
4075	Looper

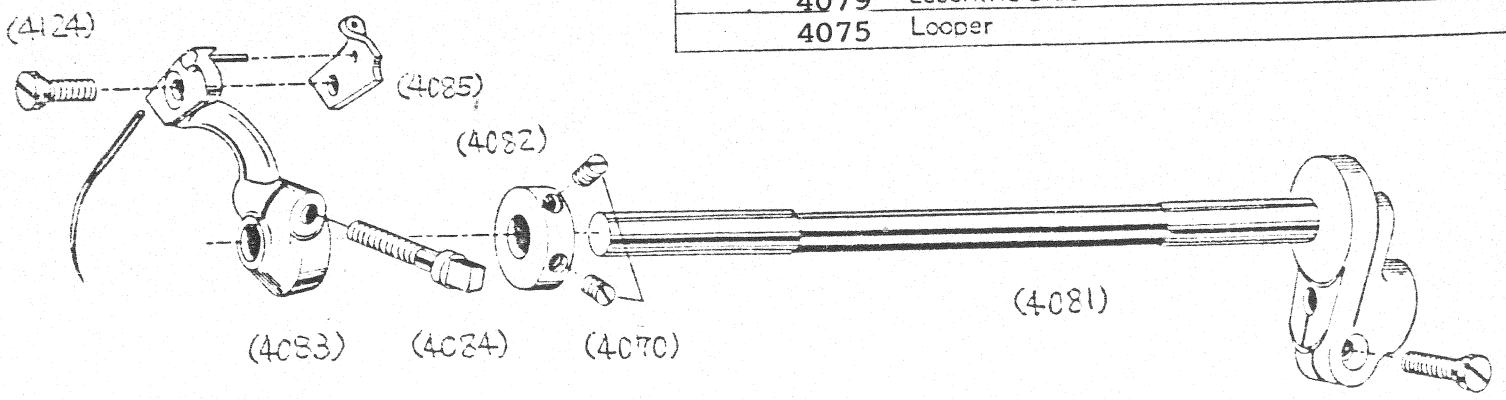

NEEDLE DRIVE GROUP

4083	Needle Lever
4084	Screw - Needle Lever Clamp
4085	Needle Clamp
4124	Screw - Needle Clamp

4081	Needle Shaft
4124	Screw - Eccentric Ball Clamp
4052	Collar - Needle Shaft
4070	Set Screw - Needle Shaft Collar

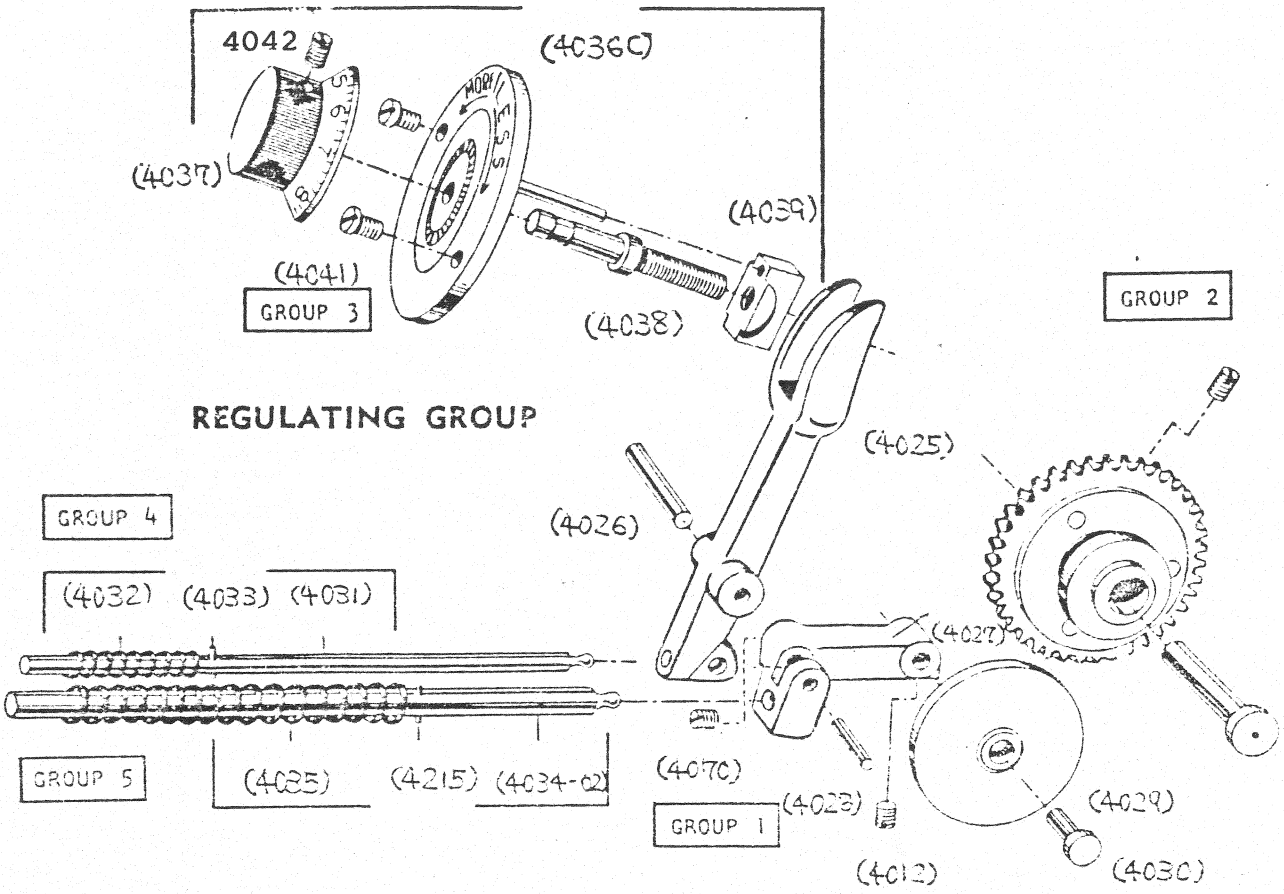

GROUP 1

4027	Support Arm - Cam Roller - (1118)
4025	Regulating Fork
4026	Pin - Regulating Fork-Pivot
4028	Pin - Roller Support Arm-Pivot
4070	Screw - Roller Support Arm Pivot Pin-Set
4029	Cam Roller
4030	Pin - Cam Roller Support
4012	Screw — Cam Roller Support Pin-Set

GROUP 2

4020C	Skip Eccentric Gear Assembly (1118)
4023	Pin - Skip Eccentric Gear
4021	Screw - Skip Eccentric Gear

GROUP 3

	Regulating Dial Assembly
4038C	Regulating Dial Shoe (4039)
4038C	Regulating Dial Screw (4038)
4036C	Face Plate and Guide Pin Assembly
4041	Screw - Regulating Dial Assembly
4037	Dial and Ratchet Assembly
4042	Screw - Dial and Ratchet Assembly-Lock

GROUP 4

	Push Rod Assembly
4031	Push Rod (1¼")
4033	Cotter Pin
4032	Spring - Push Rod (1¼")

GROUP 5

	Push Rod Assembly
4034-02	Push Rod (1⅜")
4215	Cotter Pin
4035	Spring - Push Rod (1⅜")

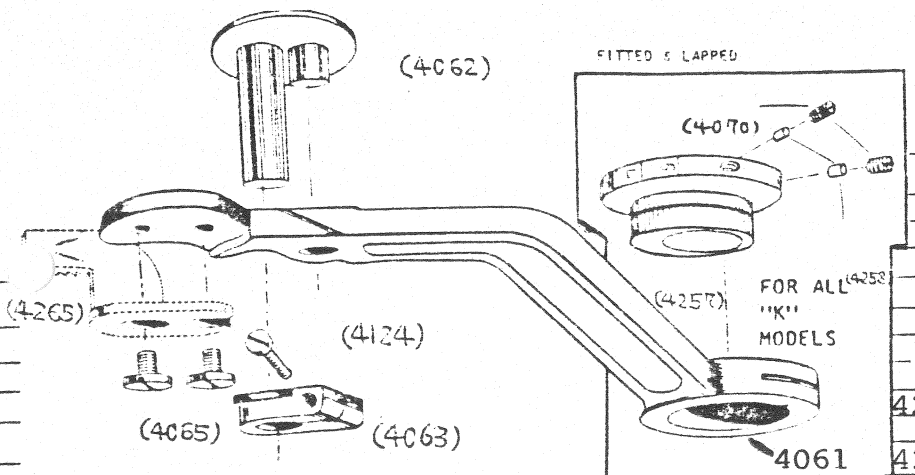

FEED DRIVE GROUP

4061	Feed Lever
4257	Stitch Regulating Collar
4258	Stitch Regulating Collar For all "K"
4070	Screw-Stitch Regulating Collar-Clamp
4062	Rocker Pin Assembly
4063	Collar - Rocker Pin
4124	Screw - Rocker Pin Collar - Clamp
4265	Feed Dog
4265-1	Feed Dog Fine, 20 Teeth to Inch
4065	Screw - Feed Dog

4257-4061 Fitted & Lapped

GROUP 1

4144	Knee Lifter Rod Shaft
4141	Lift Arm
4014	Screw - Lift Arm Clamp
4143	Nut - Lift Arm Adjusting Screw-Lock
4142	Screw - Lift Arm Adjustment
4145	Spring - Knee Lifter Rod-Return
4146	Collar - Knee Lifter Rod
10524	Set Screw - Knee Lifter Rod Collar
4148	Feed Frame "S" Hook
4149	Knee Lifter Rod Sleeve
4150	Knee Lifter Rod Sleeve Screws

GROUP 2

4190	Knee Lifter Rod
4191	Knee Pad
4192	Knee Pad Screw
4193	Rubber - Knee Pad

GROUP 3

4044	Spring Link Assembly
4043	Main Spring
4047	Screw - Main Spring Link
4048	Nut - Main Spring Adjusting
4113	Nut - Spring Link Assembly-Retaining

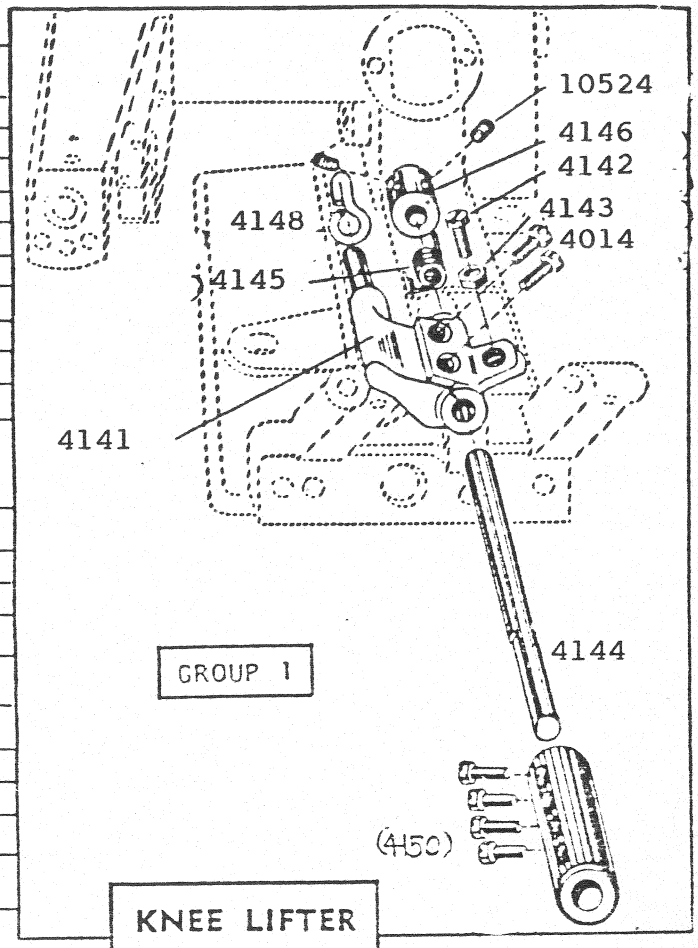

KNEE LIFTER GROUP

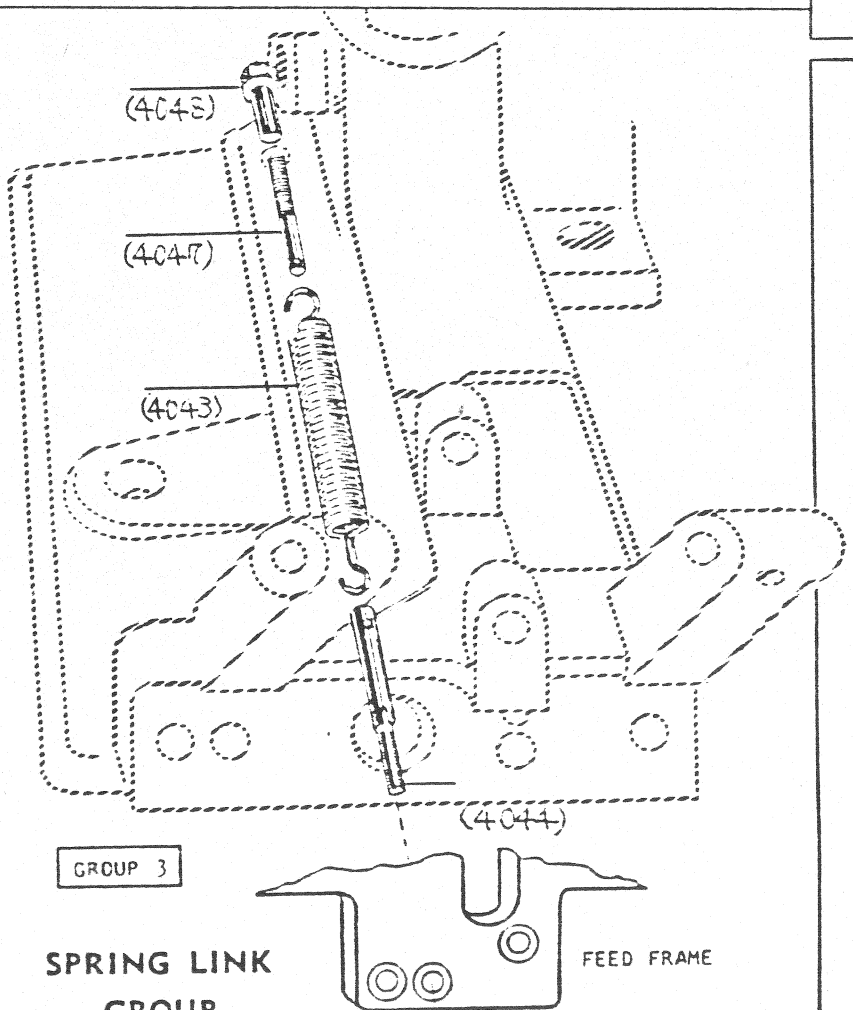

SPRING LINK GROUP

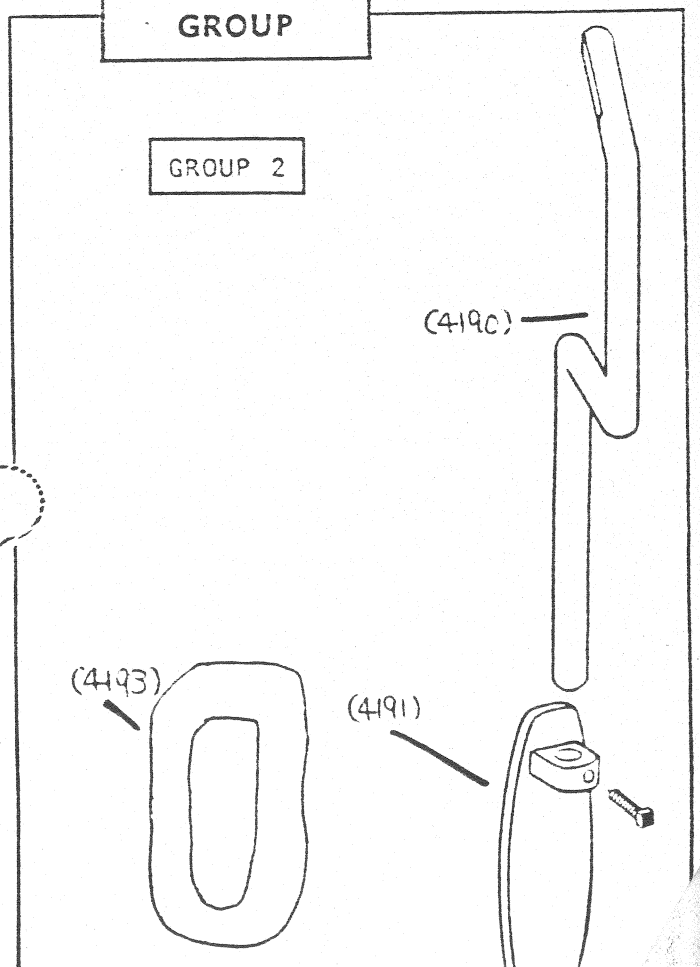

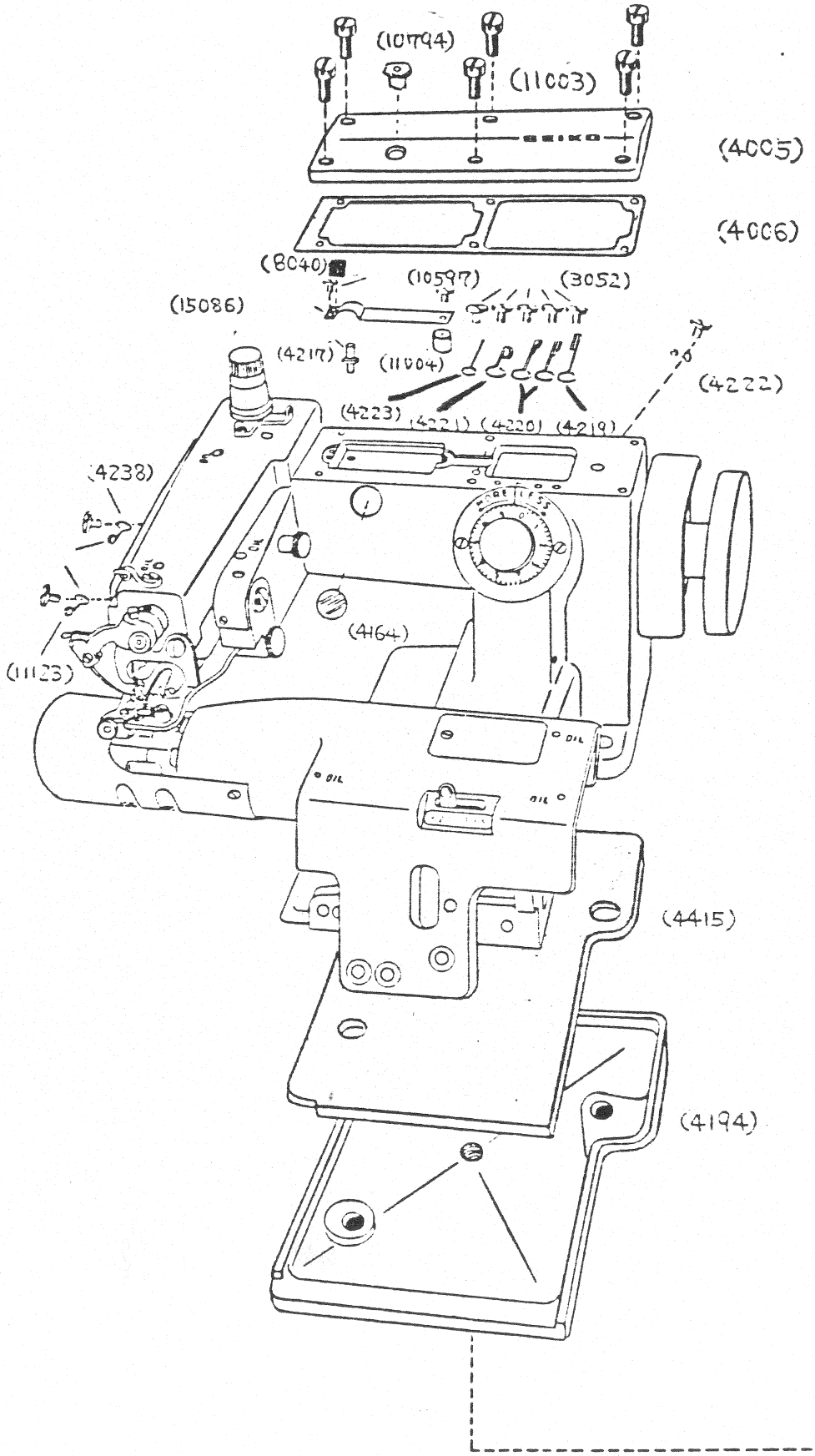

CONSEW
SEMI-SELF-OILER
MODELS

1118L
SERIES

IMPORTANT

For CONSEW Semi-Self Oiler Models 1118L Series. Use same part numbers as with 1118 models but add prefix "L".

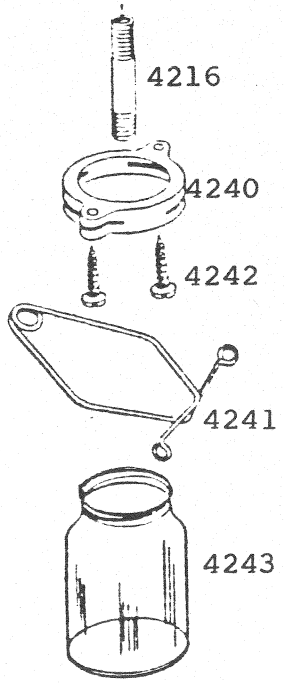

IMPORTANT – For CONSEW Semi-Self-Oiler Models – 1118L SERIES

Use same part numbers as with 1118 models, but add prefix "L".

Example: Needleshaft (1118 Models) Part No. 4081
Needleshaft (1118L Models) Part No. L-4081

PARTS LISTED BELOW ARE USED EXCLUSIVELY ON CONSEW SEMI-SELF-OILERS 1118L MODELS).

4515	Felt Pad - Base
4194	Base - Machine
4216	Nipple - Base
4240	Holder - Oil Bottle
4242	Screws - Holder
4241	Spring Clamp - Bottle Holder
4243	Oil Bottle
4005	Cover - Main Frame
4006	Gasket - Cover
11003	Screws - Cover
15086	Oil Vibrator
11004	Spring - Oil Vibrator
10597	Screw - Oil Vibrator
8040	Screws - Splasher
11109C-C	Wire Loop Holder - Wick
11109C-C	Wick - Bushing
4219	Wire Loop Holder - Wick 11109C-B
11109C-B	Wick - Rib Connection Lever
4220	Wire Loop Holder - Wick 11109C-E
11109C-E	Wick - Skip Eccentric Gear
4221	Wire Loop Holder - Wick 11109C-A
11109C-A	Wick - Skip Stitch Gear Drive
4223	Wire Holder - Wicks
3052	Screws - Wire Loop Holders
4217	Nipple - Wick
11109C-D	Wick - Main Shaft
4238/11123	Wire Loop Holder - Wick 11109C-F
11109C-F	Wick - Looper Rod Carrier
4164	Glass - Oil Gauge
4222	Wire Loop Holder - Wick 11109C-G
11109C-G	Wick - Drain From Side Cover To Base
10794	Oil Cup (3/8")
11044	Screw - Wire Loop Holder
11067	Nut - Screw (11044)

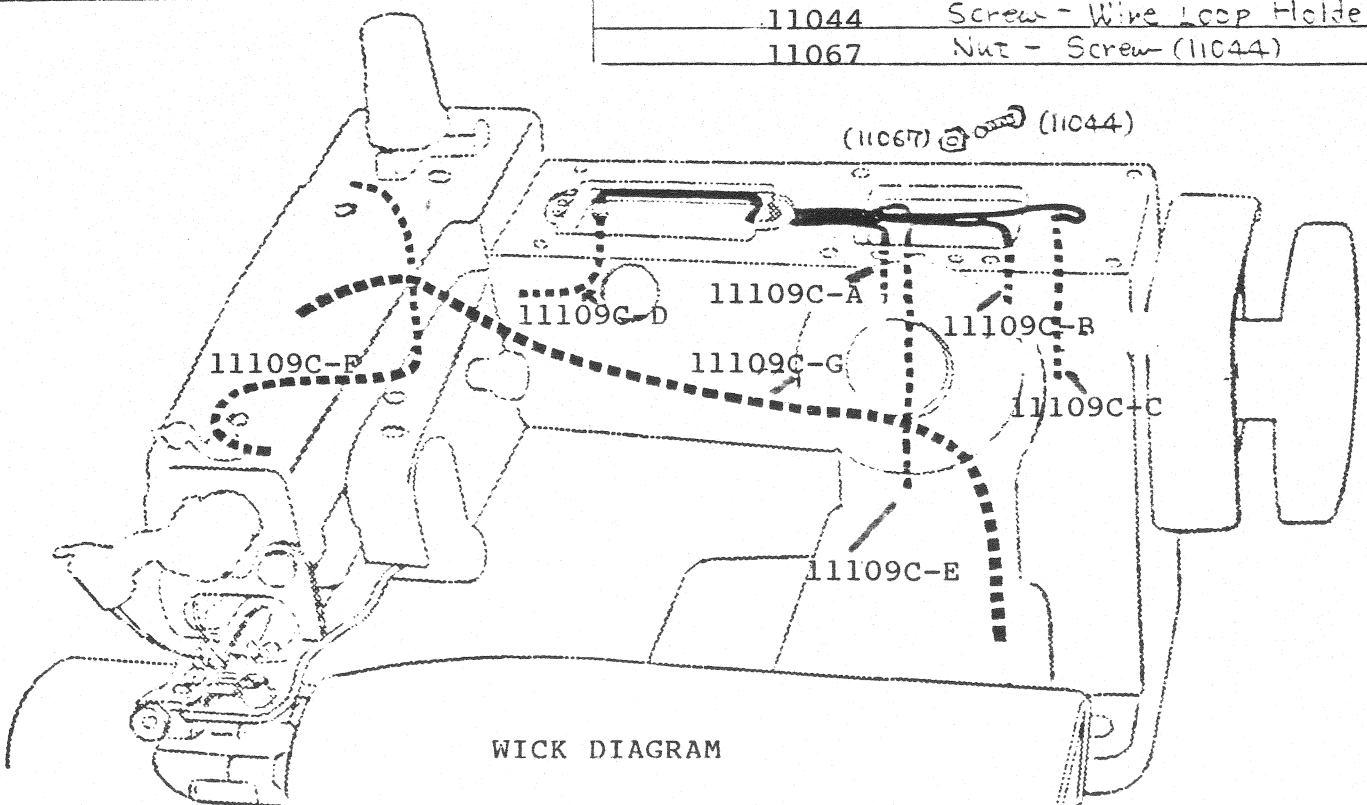

WICK DIAGRAM

STANDARD SIZE NEEDLES

#10	Fine knit rayon
#15	Fine knit wear
#20	Fine knit jersey
#25	Dresses and light fabrics
#30	For sportswear
#35	For heavy, hard material and coats
#40	For extra hard material

Also available — #1 - #1½

Needle size numbers: #2 - #2½ - #3 - #3½ - #4 - #4½

VERY IMPORTANT

USE ONLY GENUINE CONSEW NEEDLES. ACCEPT NO OTHERS.

ACCESSORY GROUP

DESCRIPTION	PART No.
Bolt — Machine Mounting	4195
Wing Nut — Machine Mounting Bolt Attaching	4197
Washer — Machine Mounting Bolt (1⅜" O.D.)	4196
Washer — Machine Mounting Bolt (1" O.D.)	4196
Felt Pad — Machine Mounting	4415
Rubber Pad — Knee Lifter	4193
Cotton Stand — Base and Spool Post Assembly	4198C
Thread Post	4200
Wood Screw — Cotton Stand Attaching	6052
Oil Can	8125
Screwdriver	8120/8121/8118
Spinner (9 x 8)	4202
Needle System	251LG