PFAFF®

3337

Service Manual

Innovation made by PFAFF

Service Manual for Pfaff 3337

Notes on safety

The machine must only be used for the purpose intended.

On conversion to other versions it is imperative to observe the applicable safety regulations.

Adjustment and repair work must only be carried out by appropriately trained technicians.

Work on live parts is not permissible, except for the differences set forth in DIN 57 105 or VDE 0105.

Tools, gauges and sundry materials required for adjusting the Pfaff 3337

1 set of screwdrivers with blades from 2 to 10 mm wide
1 set of spanners with openings from 7 to 14 mm wide
1 set of hexagon socket screw keys ranging from 1.5 to 6.0 mm
1 elbowed socket spanner, part No. 99-115 326-35 (in accessories)
1 pin spanner, part No. 08-800 401-20 or 08-800 202-64
1 Seeger circlip pliers
1 hammer
1 brass drift
1 metal rule, 0.3 mm thick
1 gauge, No. 61-111 639-49
1 gauge, No. 61-111 635-21 *)
1 needle rise gauge, 2.4 mm, part No. 08-880 136-05
1 C-clamp, No. 880 137/00
1 packet of system 34 needles for models A and B, or for system 332 needles for model C.
1 strip of white paper, and
sewing thread

*) Gauge can be used for adjustments described in Sections 18 and 23.

1 Preparations for adjustment

Machine position: Master switch off, end-of-cycle position.

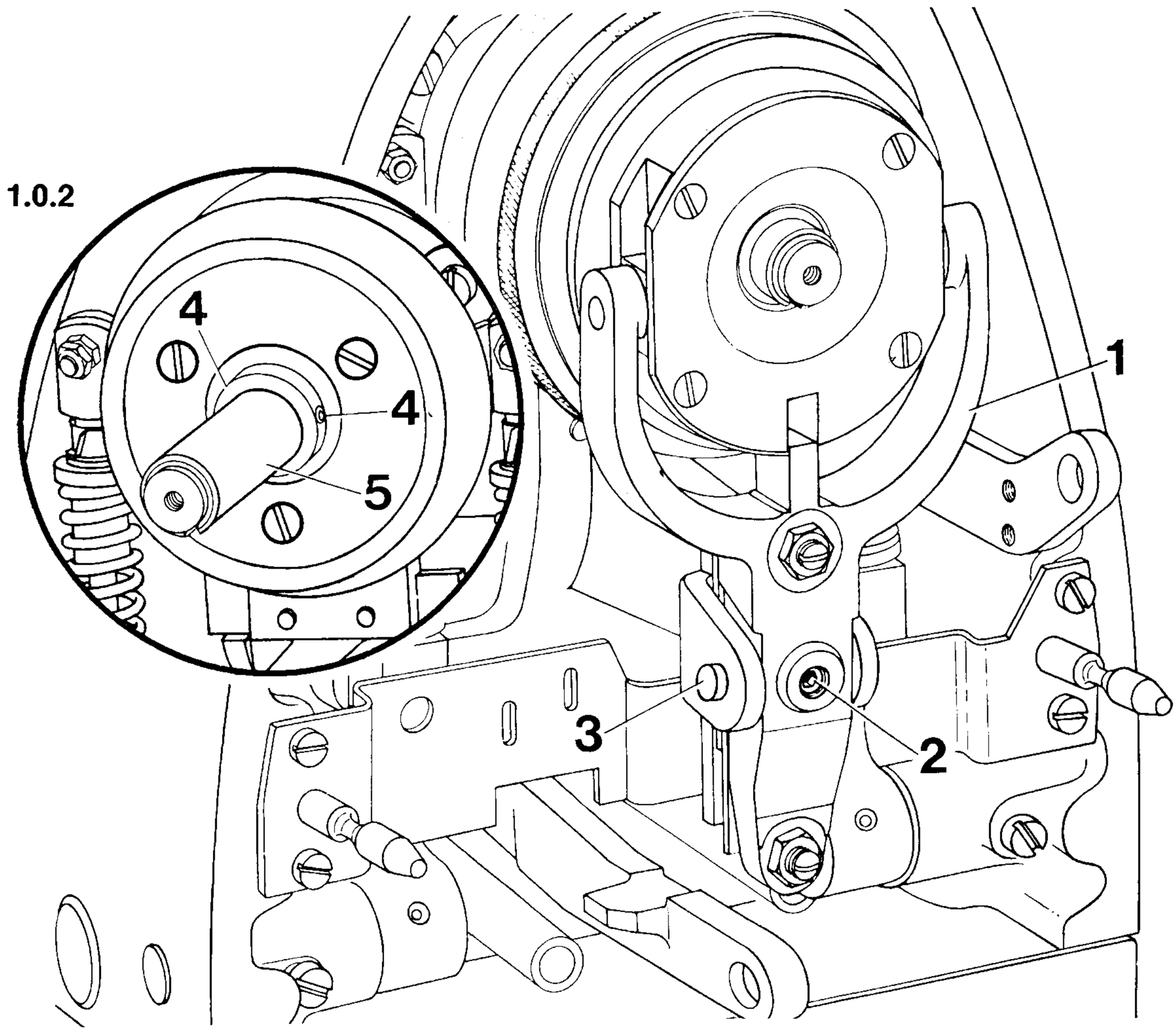

1.0.1

1.1 Remove the belt guard.

1.2 Remove the V-belt from its pulley.

1.3 Unscrew both chains and, if applicable, shut off the air at the conditioning unit.

1.4 Unscrew both clamp feet.

1.5 Unscrew the face cover.

1.6 Unscrew the thread wiper.

1.7 Take the needle out of the needle bar.

1.8 Loosen screw **2** of fulcrum stud **3** in forked clutch lever **1** (Fig. 1.0.1) and push the fulcrum stud out.

1.9 Pull the V-belt pulley, together with the forked clutch lever and the two slide blocks, off the arm shaft.

1.10 Loosen both allen screws **4** and pull bushing **5** off the arm shaft.

Correct setting:	The face side of drive pulley **4** should be flush with the annular groove on the arm shaft (see arrow in Fig. 2.0.3).

Machine position: Master switch off, stop mechanism engaged.

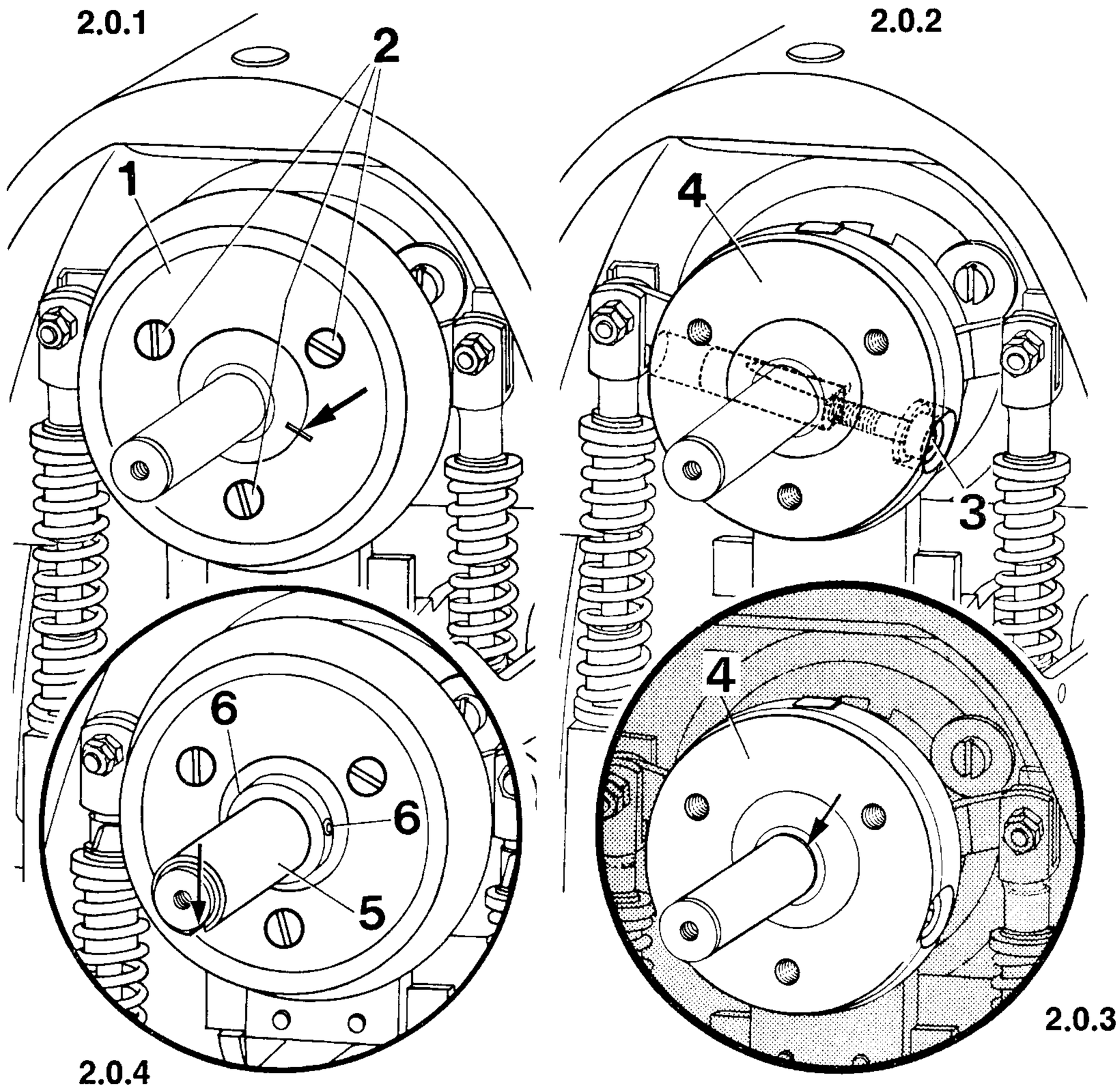

2.1 Making sure the machine is in its locked position so that the arm shaft can no longer be turned, take the three screws **2** out of clutch disc **1** (Fig. 2.0.1) and remove the latter.

2.2 Turn screw **3** in drive pulley **4** out a few turns (Fig. 2.0.2), then hit in on the head to release the cotter underneath.

2.3 **Reposition drive pulley 4 on the arm shaft so that its face side is flush with the annular groove on the shaft** (see arrow in Fig. 2.0.3).

2.4 In this position, tighten screw **3** securely.

2.5 Replace clutch disc **1** on drive pulley **4** so that the marks on both are in line (see arrow in Fig. 2.0.1), and secure it in position with the three screws **2**.

2.6 **Push bushing 5 on the arm shaft so that it bears against clutch disc 1 and its slot points downwards perpendicularly (see arrow in Fig. 2.0.4).**

2.7 In this position, tighten the two allen screws **6.**

3 Starting latch

3.1 Preliminary adjustment

Correct setting:

For the purpose of preliminary adjustment, starting latch **3** (Fig. 3.0.1) should be set at the extreme left.

Machine position: Master switch off, stop mechanism engaged.

Note: Final adjustment is made automatically when adjusting the forked clutch lever later (see paras. 4.10 to 4.13).

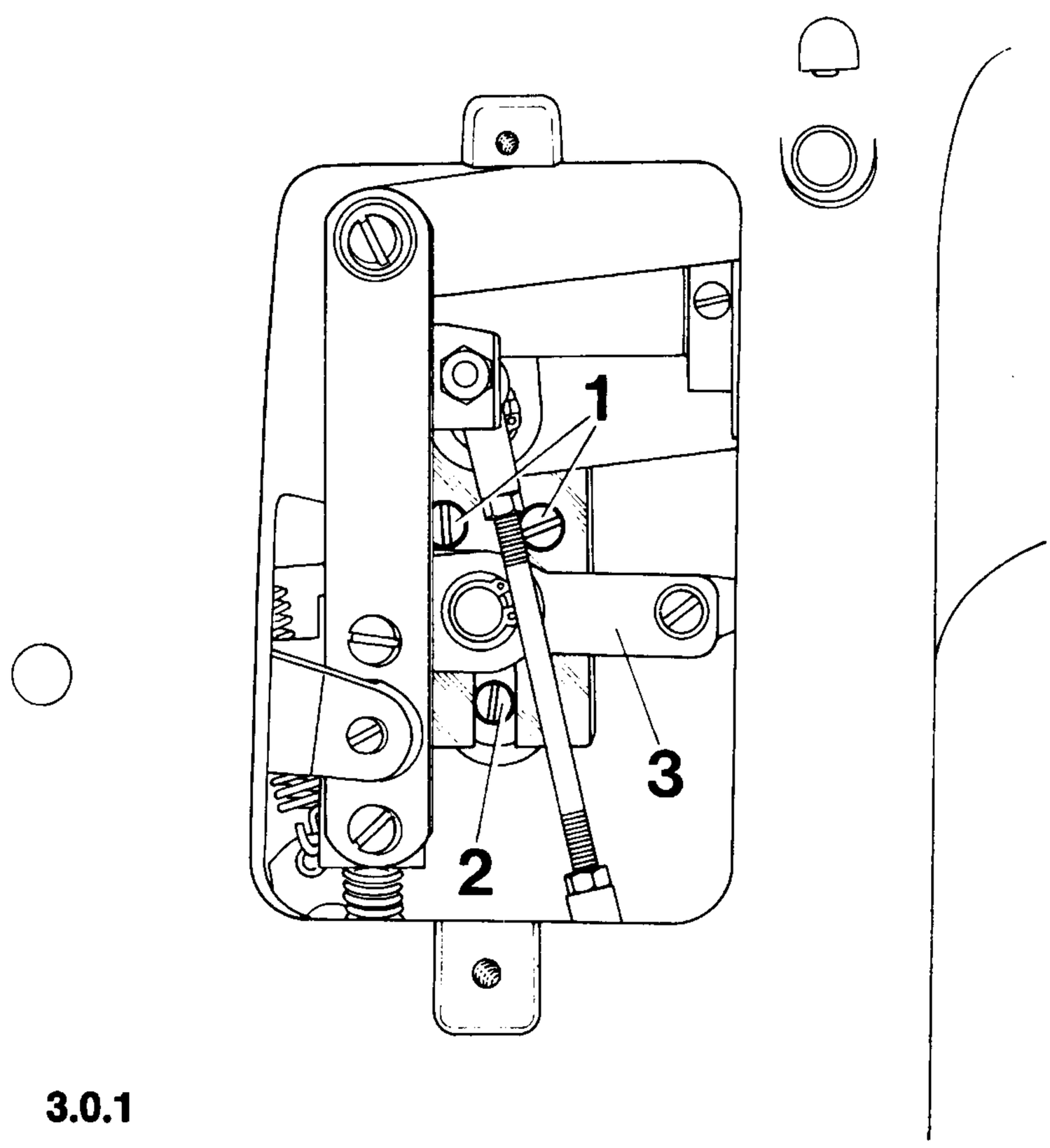

3.0.1

3.1.1 Unscrew the cover which is located on the side of the arm.

3.1.2 Through the large access window loosen both screws **1** (Fig. 3.0.1).

3.1.3 **Turn eccentric stud 2 until starting latch 3 is at the extreme left.**

3.1.4 In this position, securely tighten both screws **1** again.

3.2 Vertical adjustment

Correct setting:

When starting lever **5** is pressed down as far as it will go, locking lever **6** should contact the bottom of the cutout in starting latch **3** (see arrow in Fig. 3.0.3).

Machine position: Master switch off, stop mechanism engaged.

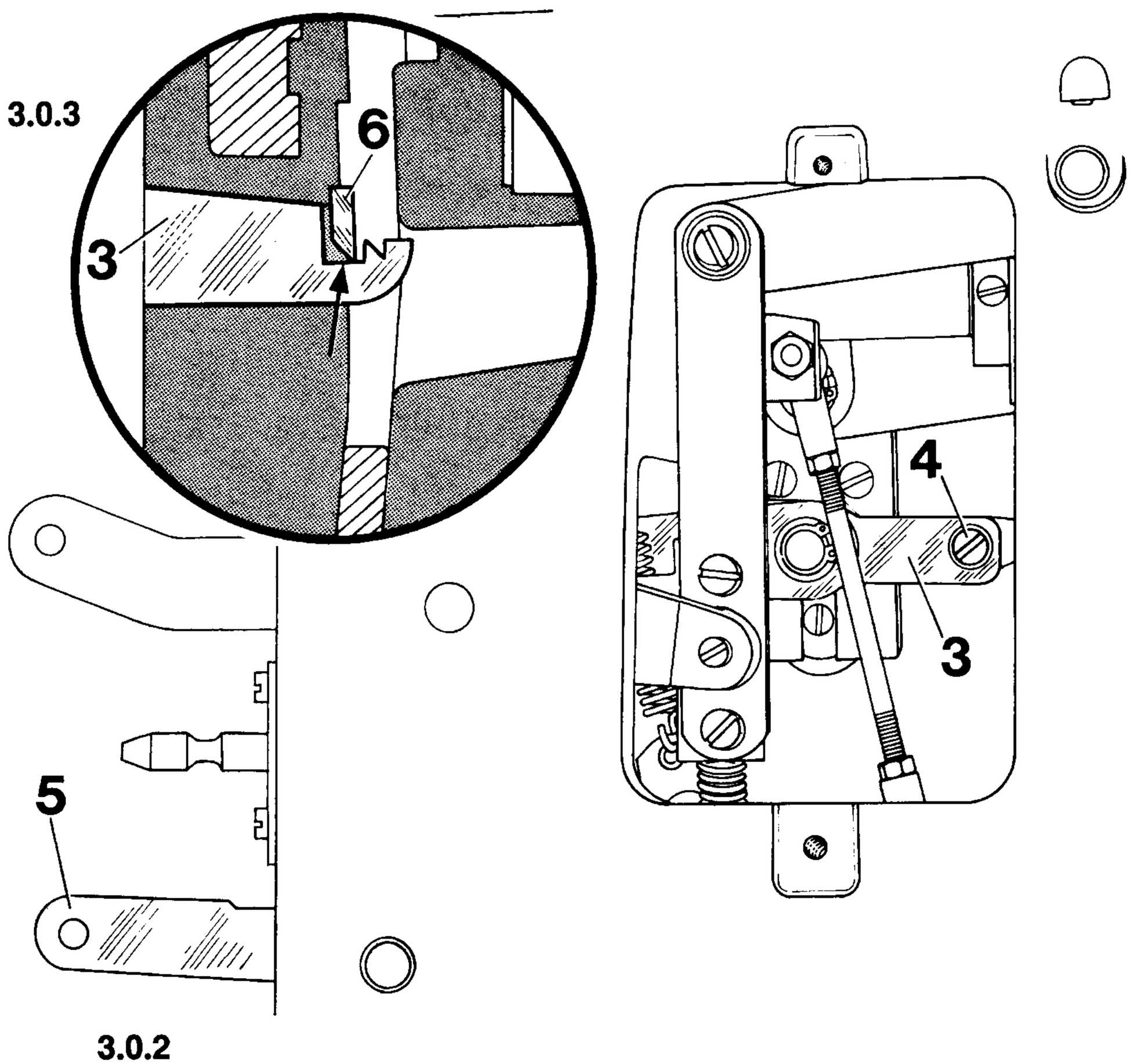

3.2.1 Through the large access window loosen screw **4** of starting latch **3** (Fig. 3.0.2).

3.2.2 Depress starting lever **5** by hand as far as it will go and check to see if starting latch **3** is arrested by locking lever **6** (Fig. 3.0.3). If it is not (because the tripping lever is positioned on the stop tripping segment of the control cam), turn the clutch disc in its normal direction of rotation at least three turns, then operate starting lever **5** again.

3.2.3 **Push starting latch 3 upwards until locking lever 6 contacts the bottom of the cutout in starting latch 3** (see arrow in Fig. 3.0.3).

3.2.4 In this position, tighten screw **4.**

3.2.5 Push starting latch **3** down until it clears locking lever **6.** Then turn the clutch disc until the stop mechanism has stopped the machine.

3.2.6 Check this adjustment (see "Correct setting").

Correct setting:

With the machine in its locked position, there should be a clearance of **1 mm** between the collar of the V-belt pulley and the edge of the annular groove on the arm shaft (see Fig. 4.0.4).

Machine position: Master switch off, stop mechanism engaged.

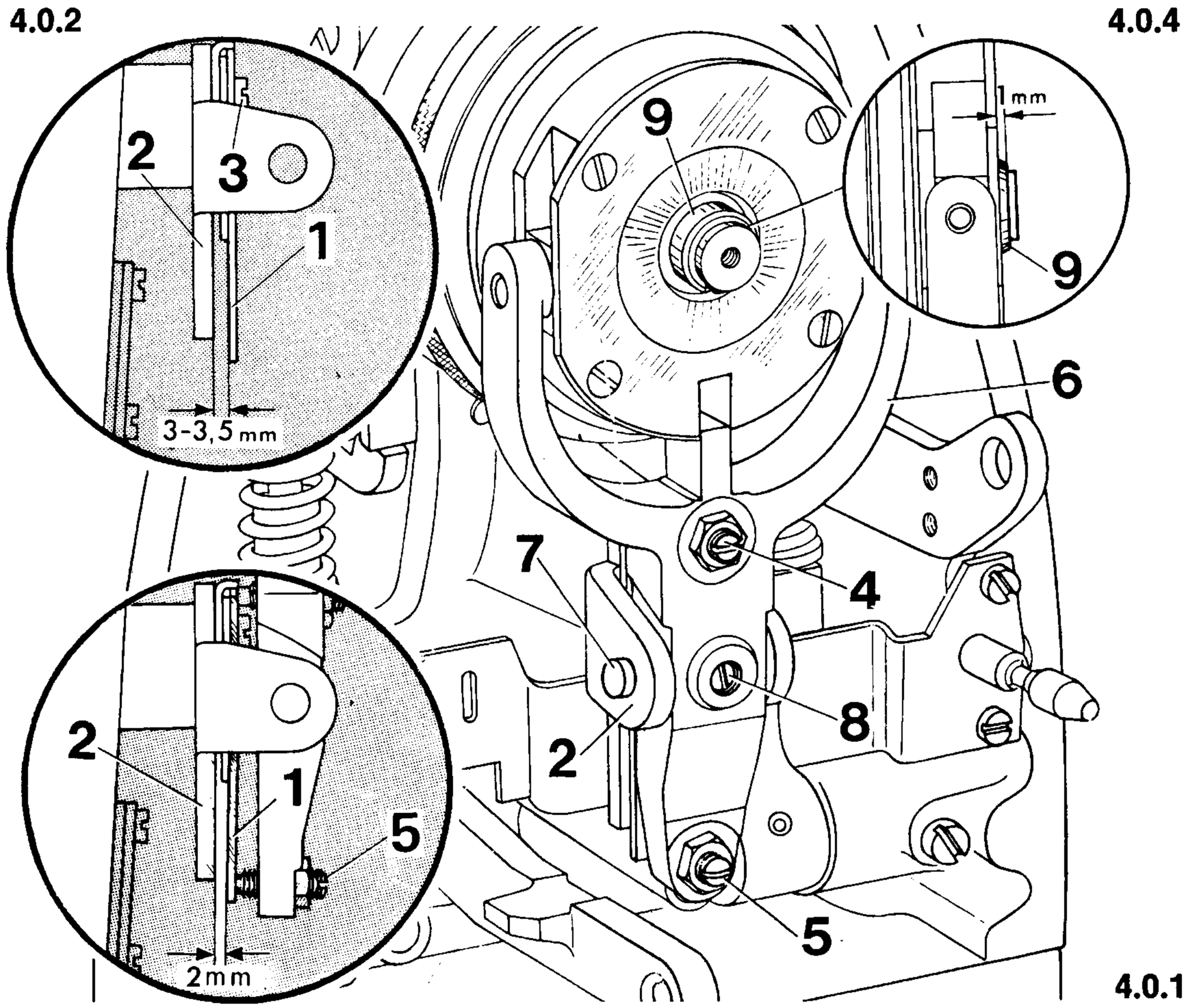

4.1 Check to make sure there is a clearance of 3.0 to 3.5 mm between leaf spring **1** and angular bracket **2** (Fig. 4.0.2) when the forked clutch lever is removed. If adjustment is required, take out screw **3** and reverse the leaf spring.

4.2 Loosen the locknuts on screws **4** and **5** of forked clutch lever **6** (Fig. 4.0.1) and turn both screws out a few turns.

4.3 Push the V-belt pulley together with forked clutch lever **6** onto the arm shaft.

4.4 Push fulcrum stud **7** through the holes in angular bracket **2** and forked clutch lever **6,** and tighten screw **8.**

4.5 Check to make sure the machine is still in its locked position so that the arm shaft cannot be turned.

4.6 **While slightly pushing against the V-belt pulley, turn screw 4 in until bushing 9 protrudes 1 mm from the face side of the V-belt pulley (Fig. 4.0.4).**

4.7 In this position, tighten the locknut on screw **4.**

4.8 Turn screw **5** in until there is a clearance of abt. 2 mm between leaf spring **1** and bracket **2** underneath (Fig. 4.0.3).

4.9 In this position, tighten the locknut on screw **5.**

Continued on next page

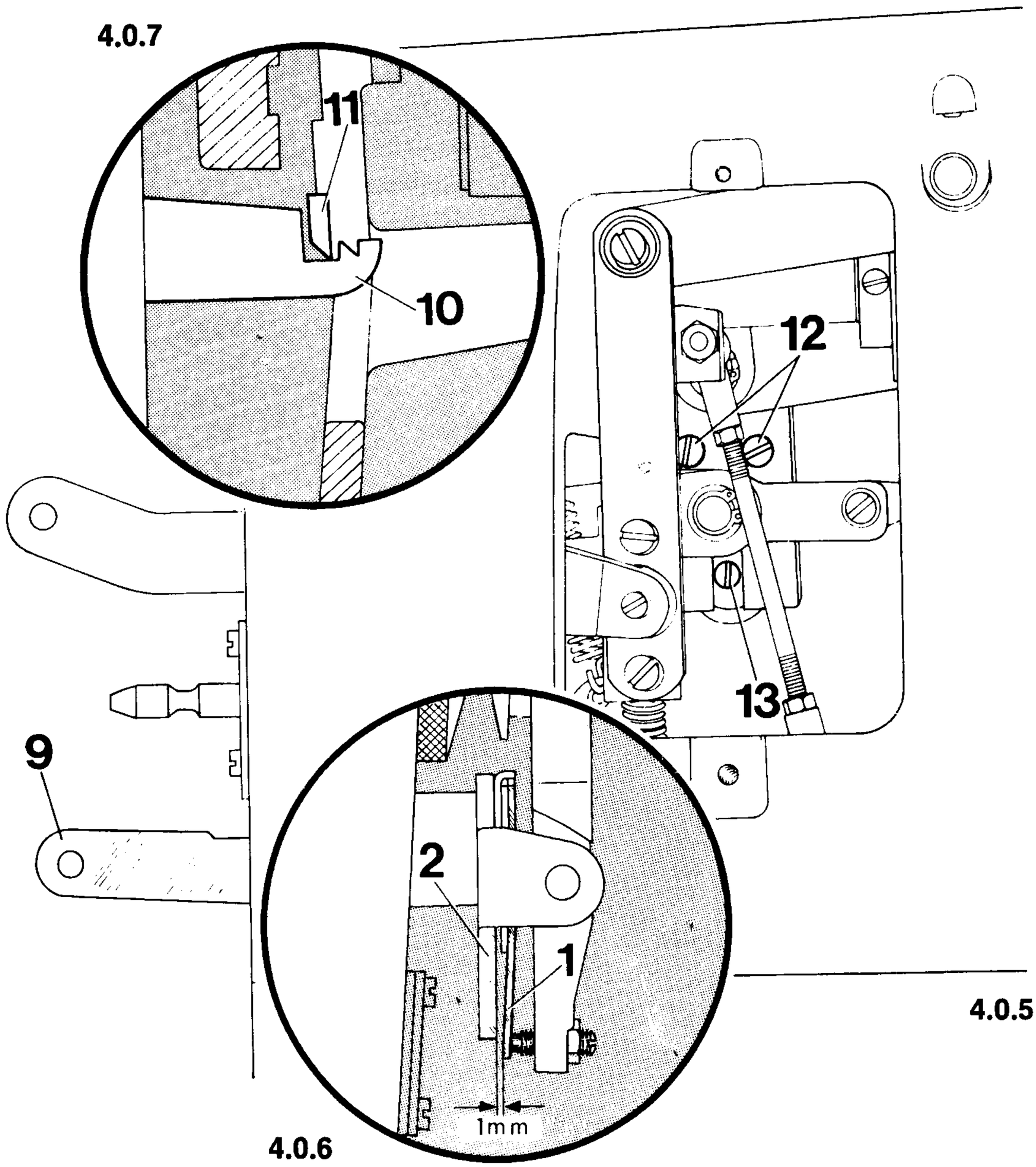

4.10 Operate starting lever **9** (Fig. 4.0.4) to cause starting latch **10** to be retained by locking lever **11** (Fig. 4.0.5).

4.11 Loosen both screws **12** (Fig. 4.0.4).

4.12 **Turn eccentric stud 13 until there is now a clearance of 1 mm between leaf spring 1 and bracket 2** (Fig. 4.0.6).

4.13 In this position, tighten both screws **12** (Fig. 4.0.4).

4.14 Check the setting given in Section 3.2 and, if necessary, adjust.

5 Clamp lifting lever

Correct setting:

When clamp lifting lever **3** is at rest, there should be a clearance of **122 mm** between thrust plate **5** (in the machine arm) and the cylinder bed top cover (Fig. 5.0.3).

Machine position: Master switch off, stop mechanism engaged.

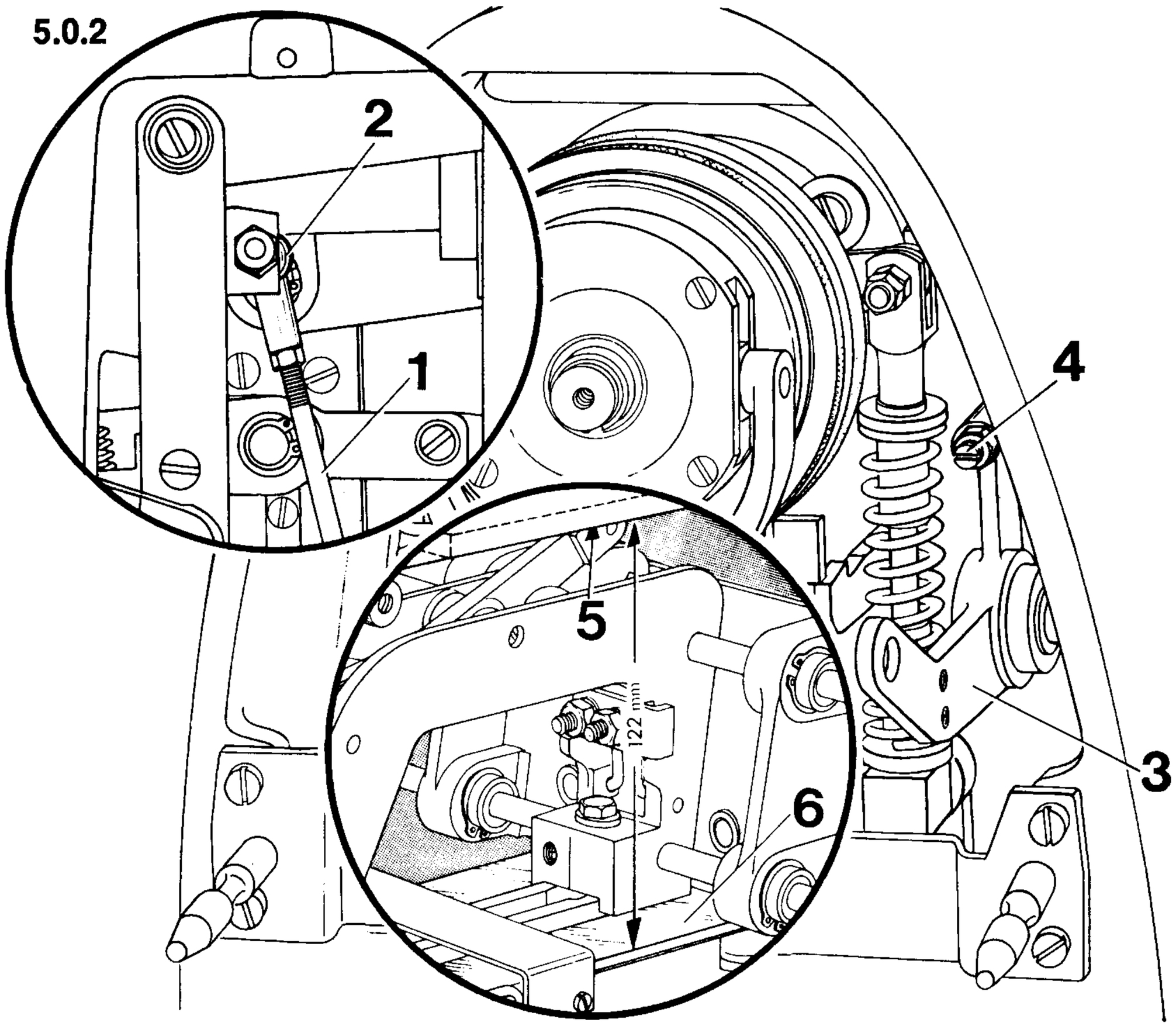

5.0.1 5.0.3

5.1 Through the large access window disconnect knife actuating rod **1** at its upper ball joint **2** (Fig. 5.0.2).

5.2 Loosen the lockmut of screw **4** on clamp lifting lever **3** (Fig. 5.0.1) and turn the screw out a few turns.

5.3 **Turn screw 4 again until the clearance between thrust plate 5 in the machine arm and top cover 6 on the cylinder bed measures 122 mm** (Fig. 5.0.3).

5.4 In this position, tighten the locknut on screw **4.**

5.5 Connect knife actuating rod **1** again.

5.6 Check this adjustment (see "Correct setting").

6 Knife actuating rod

Correct setting:

When clamp lifting lever **3** is at rest, the guide stud should be positioned at the lowest point in the slot of the knife actuating segment without exerting any pressure (see arrow in Fig. 6.0.2).

Machine position: Master switch off, stop mechanism engaged.

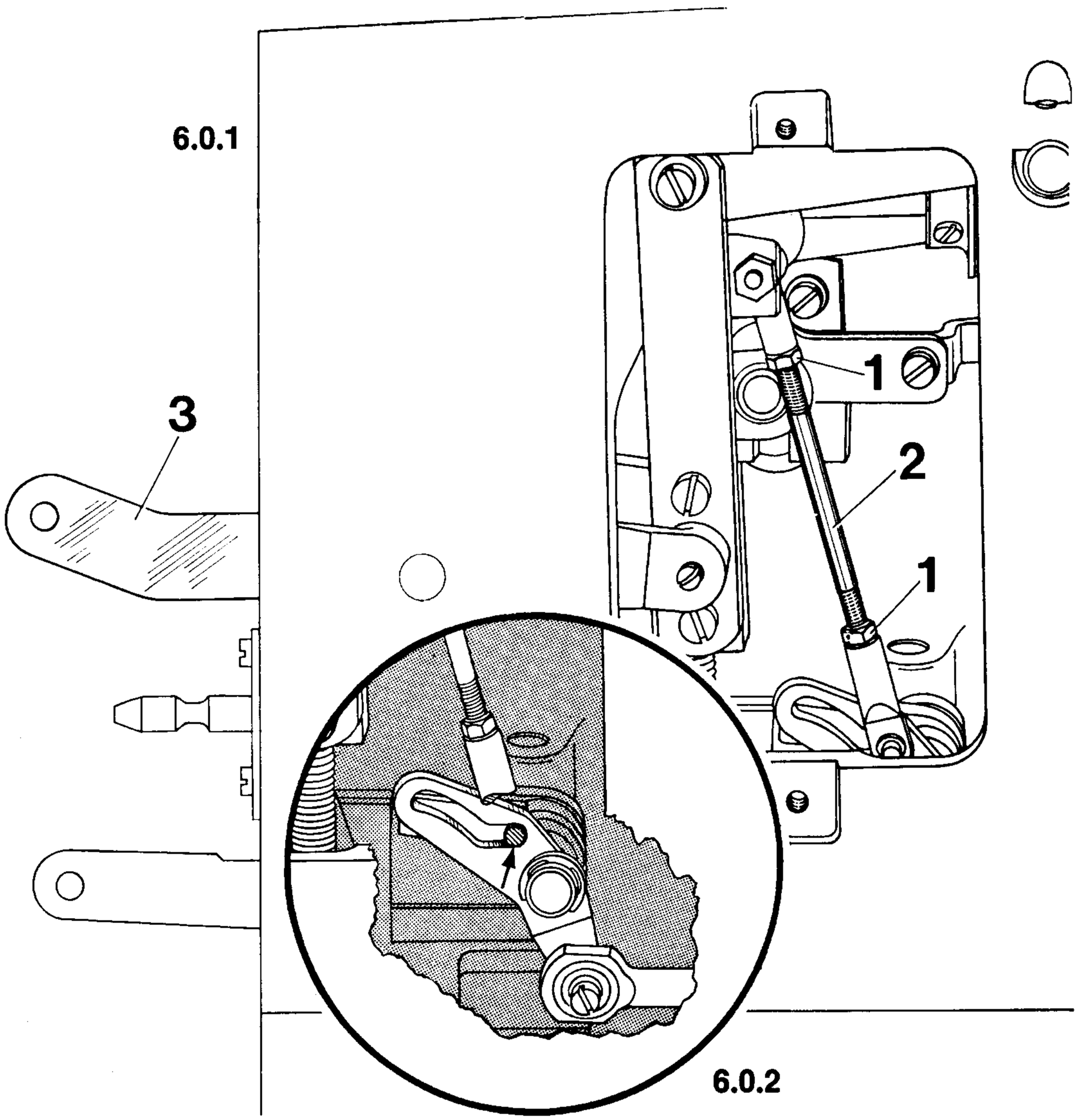

6.1 Through the access window loosen both locknuts **1** of connecting rod **2** (Fig. 6.0.1).

Note: The top nut has left-hand thread.

6.2 **Turn connecting rod 2 until the guide stud is positioned at the lowest point in the slot of the knife actuating segment without exerting any pressure** (see arrow in Fig. 6.0.2).

6.3 In this position, tighten both locknuts **1** on connecting rod **2.**

7 Locking lever

Correct setting:

With the machine in its locked position and clamp lifting lever 3 operated, there should be a lateral clearance of abt. **1 mm** between locking lever **2** and locking latch **4** (Fig. 7.0.2).
With clamp lifting lever **3** at rest and starting lever **5** depressed, there should be a vertical clearance of 0.1 mm between locking latch **4** and locking lever **2** (Fig. 7.0.3).

Machine position: Master switch off, stop mechanism engaged.

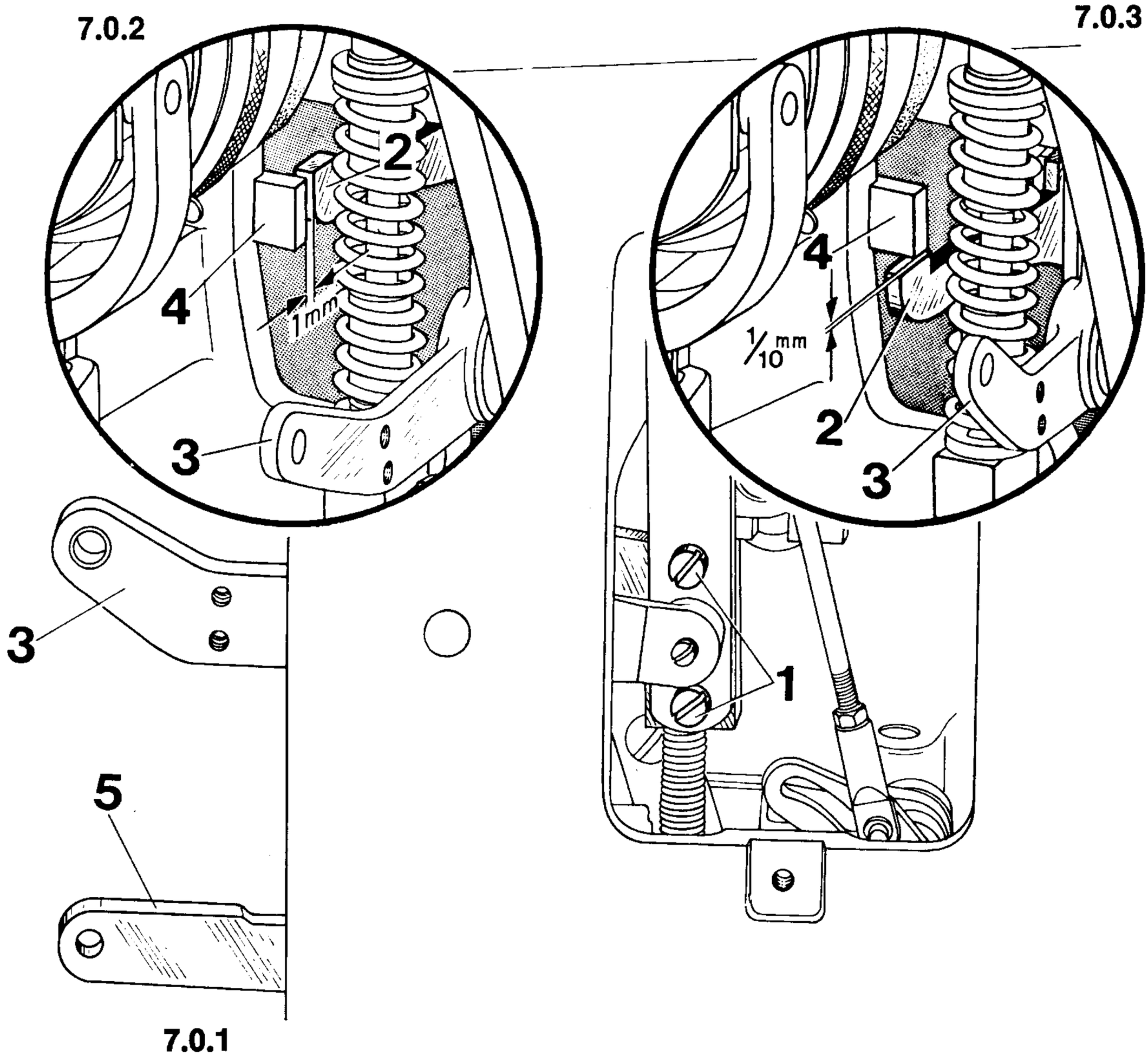

7.1 Through the access window loosen both screws **1** (Fig. 7.0.1) just sufficiently to allow locking lever **2** (Fig. 7.0.2) to be moved against resistance.

7.2 **Push clamp lifting lever 3 down as far as it will go and adjust locking lever 2 until there is a clearance of abt. 1 mm between it and locking latch 4** (Fig. 7.0.2).

7.3 **Operate starting lever 5 and adjust locking lever 2 vertically so that there is a clearance of 0.1 mm between it and locking latch 4.**

7.4 Tighten both screws **1.**

7.5 Check this adjustment (see "Correct setting").

8 **Micro switches**

(on machines equipped with electro-magnetic or pneumatic starting mechanism).

Correct setting:

When clamp lifting lever **3** is at rest, switch **2** should just have been closed. When starting lever 6 is at rest, switch **5** should also just have been closed (Figs. 8.0.1 and 8.0.2).

Machine position: Master switch off, stop mechanism engaged.

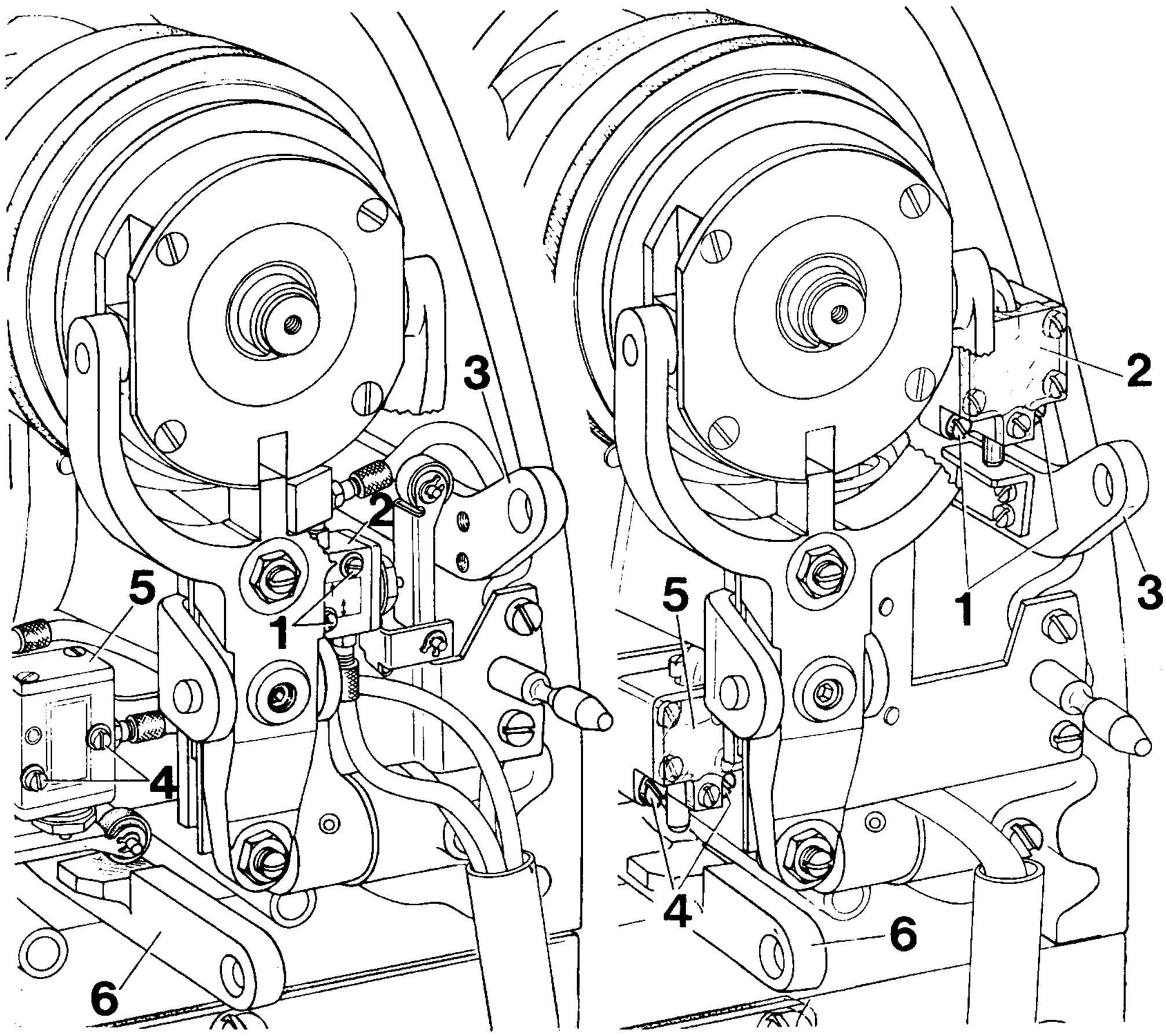

8.0.1 **8.0.2**

8.1 Loosen both screws **1** of starting mechanism inhibitor switch **2** (Figs. 8.0.1 and 8.0.2).

8.2 **Adjust switch 2 so that it has just been closed when clamp lifting lever 3 is at rest.**

8.3 In this position, tighten both screws **1.**

8.4 Loosen both screws **4** of clamp lifter mechanism inhibitor switch **5** (Figs. 8.0.1 and 8.0.2).

8.5 **Adjust switch 5 so that it has just been closed when starting lever 6 is at rest.**

8.6 In this position, tighten both screws **4.**

8.7 Check this adjustment (see "Correct setting").

9 Needle position

Correct setting:

The needle should be centered in the needle hole exactly (Fig. 9.0.2).

Machine position: Master switch off, stop mechanism disengaged.

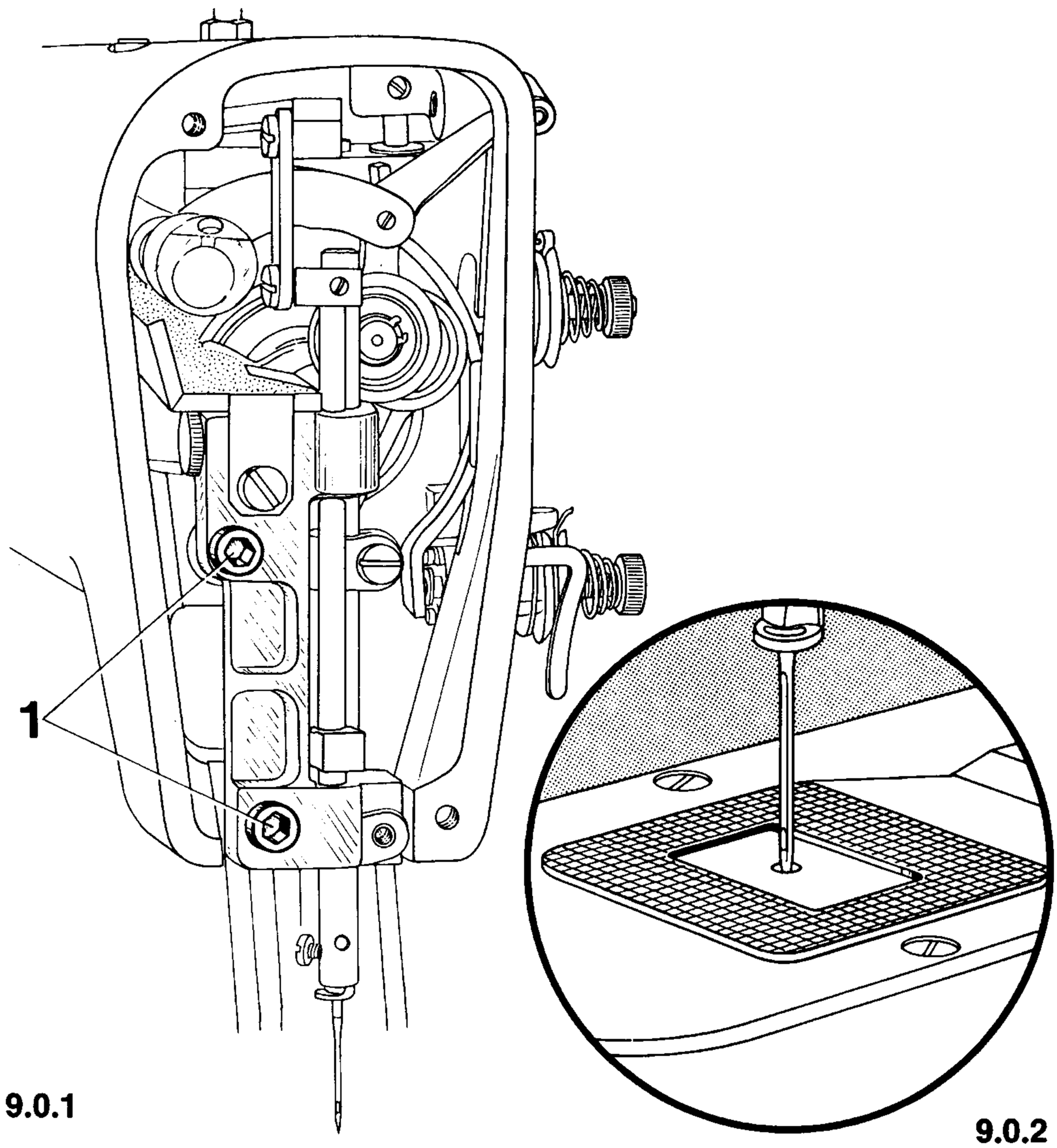

9.1 Insert a new needle with its long groove facing toward you (System 34 for Model A and B, System 332 for Model C machines).

9.2 Loosen both screws **1** of the needle bar frame (Fig. 9.0.1).

9.3 **Rotate the V-belt pulley and simultaneously adjust the position of the needle bar frame until the needle is centered in the needle hole exactly** (Fig. 9.0.2).

9.4 In this position, evenly tighten both screws **1** to prevent binding of the needle bar.

9.5 Check this adjustment (see "Correct setting").

Machine position: Master switch off, end-of-cycle position.

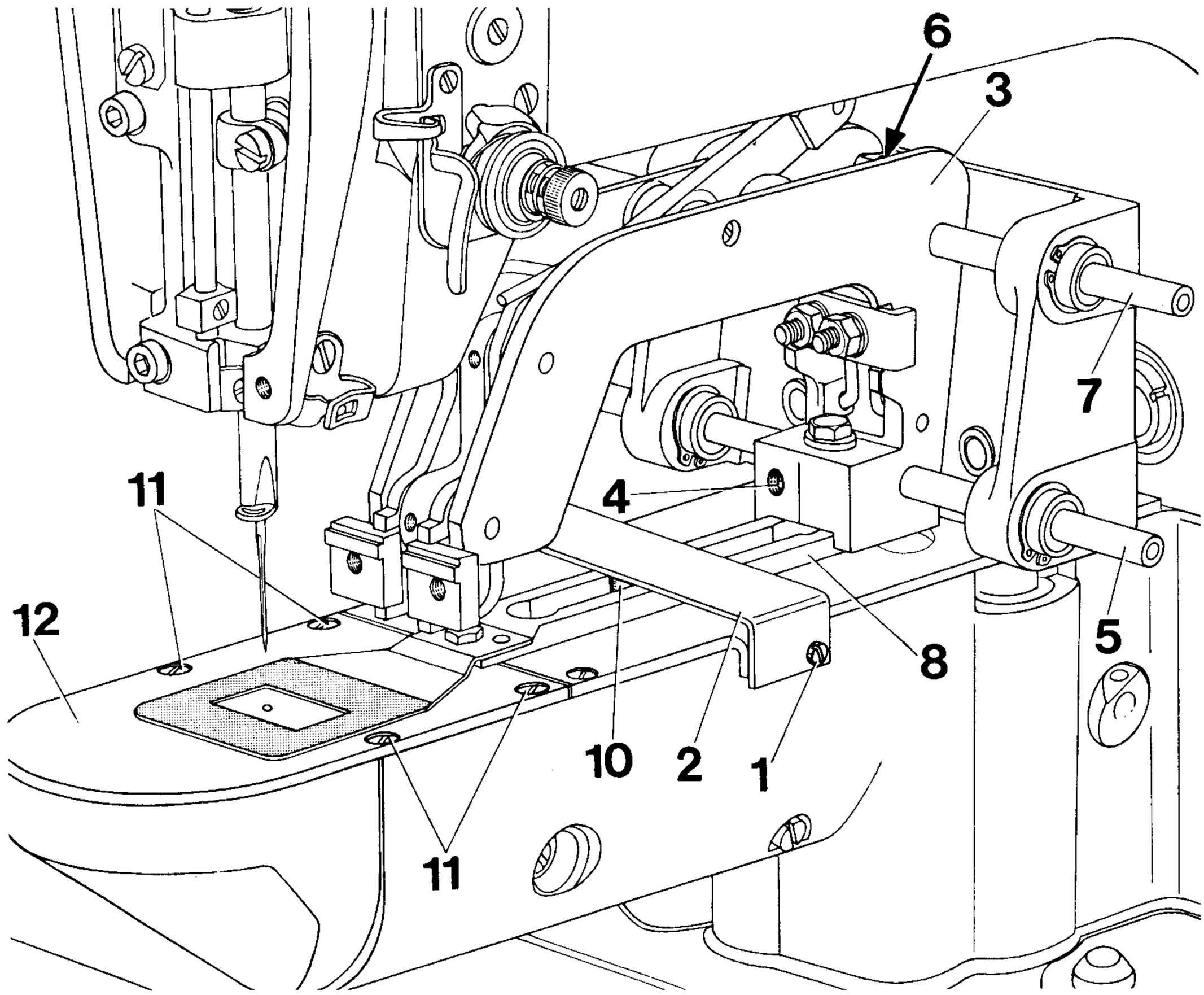

10.0.1

10.1 Take out both screws **1** and remove cover strip **2** (Fig. 10.0.1).

10.2 Loosen screw **4** of the lower transverse motion shaft **5** in arch clamp **3** and pull shaft **5** out.

10.3 Loosen screw **6** of the upper transverse motion shaft **7** in arch clamp **3** (see arrow) and pull out shaft **7.**

10.4 Remove arch clamp **3** with feed bar **8** and feed plate.

10.5 Remove slide block **10** from the front stud, taking care that you do not lose any of the spacing washers which may have been placed on it.

10.6 Take out the four screws **11** of needle plate **12** and remove the latter.

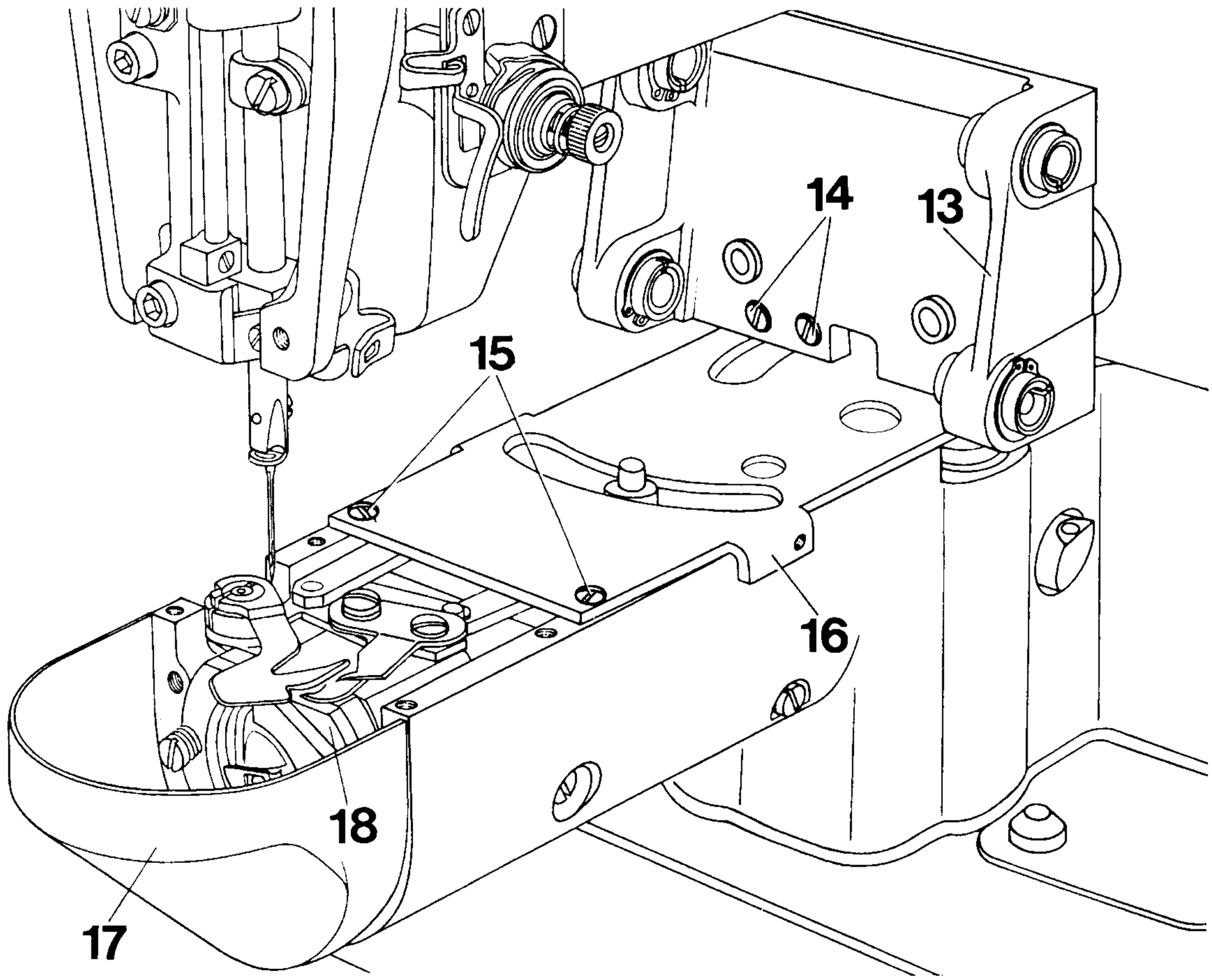

10.0.2

10.7 Take out the two screws **14** which are located in trunnion block **13** for the lengthwise clamp motion (Fig. 10.0.2).

10.8 Pull trunnion block **13** forward as far as it will go, then remove it by pulling it out of the machine sideways.

10.9 Remove the slide block guide together with the slide block which are exposed after stripping the trunnion block. Again take care that you do not lose any spacing washers.

10.10 Take out the four screws **15** of cylinder bed top cover **16** and strip the latter.

10.11 Unscrew the leaf spring of cylinder bed cap **17.**

10.12 Unscrew cylinder bed cap **17.**

10.13 Take off shuttle race cover **18.**

10.14 Take the shuttle and the bobbin out of the shuttle race.

Continued on next page

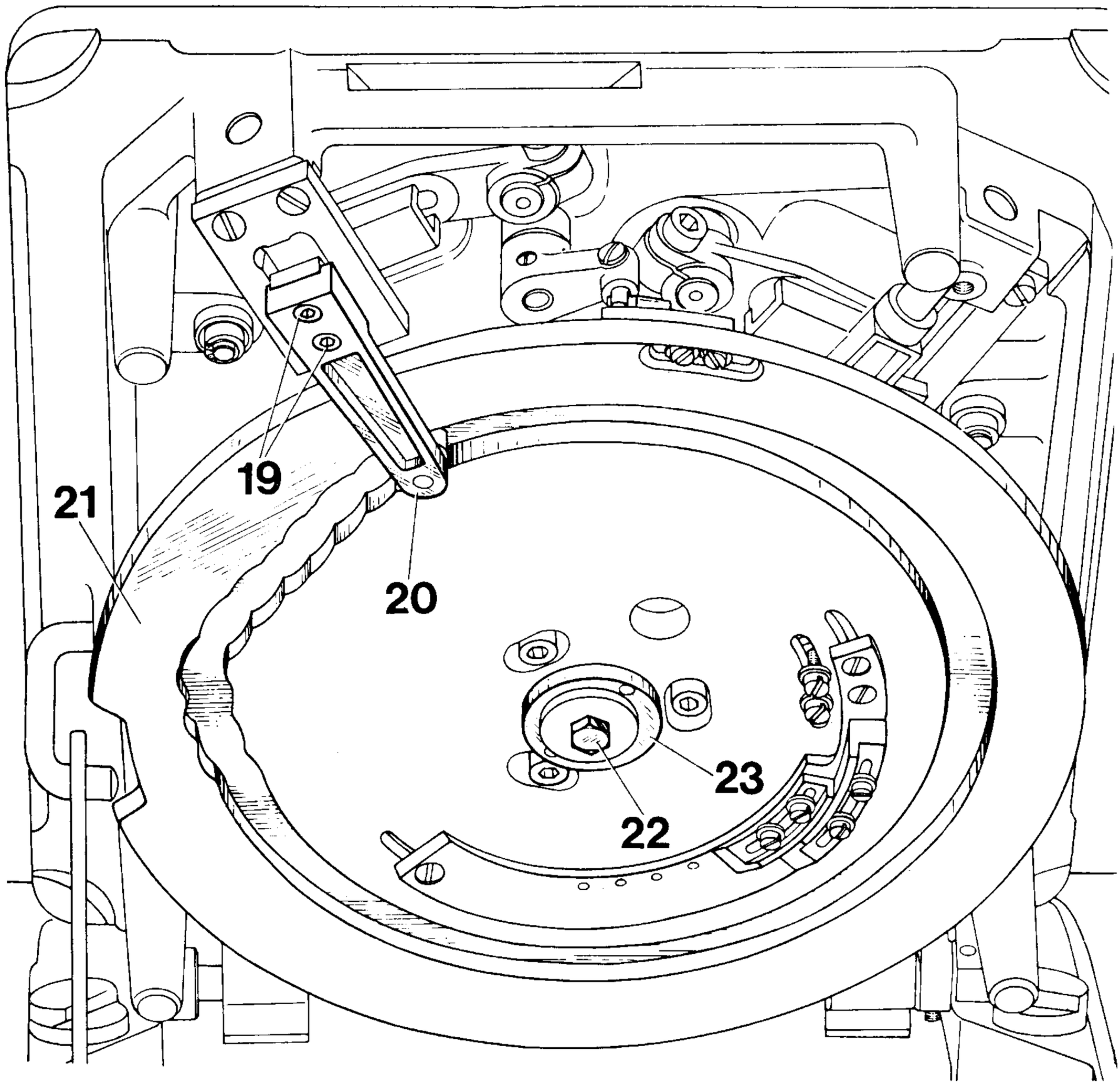

10.0.3

10.15 Take out both screws **19** and remove roller lever **20** (Fig. 10.0.3).

10.16 Take out hexagon screw **22** in the middle of feed cam **21.**

10.17 Turn eccentric bushing **23** in the feed cam slightly toward the left (i. e. counter-clockwise), then pull it out. Strip feed cam **21.**

11 Shuttle-to-needle clearance

Correct setting:

When the point of the shuttle is positioned in the middle of the needle scarf, there should be a clearance of **0.1 mm** between both parts (Fig. 11.0.2).

Machine position: Master switch off, stop mechanism disengaged.

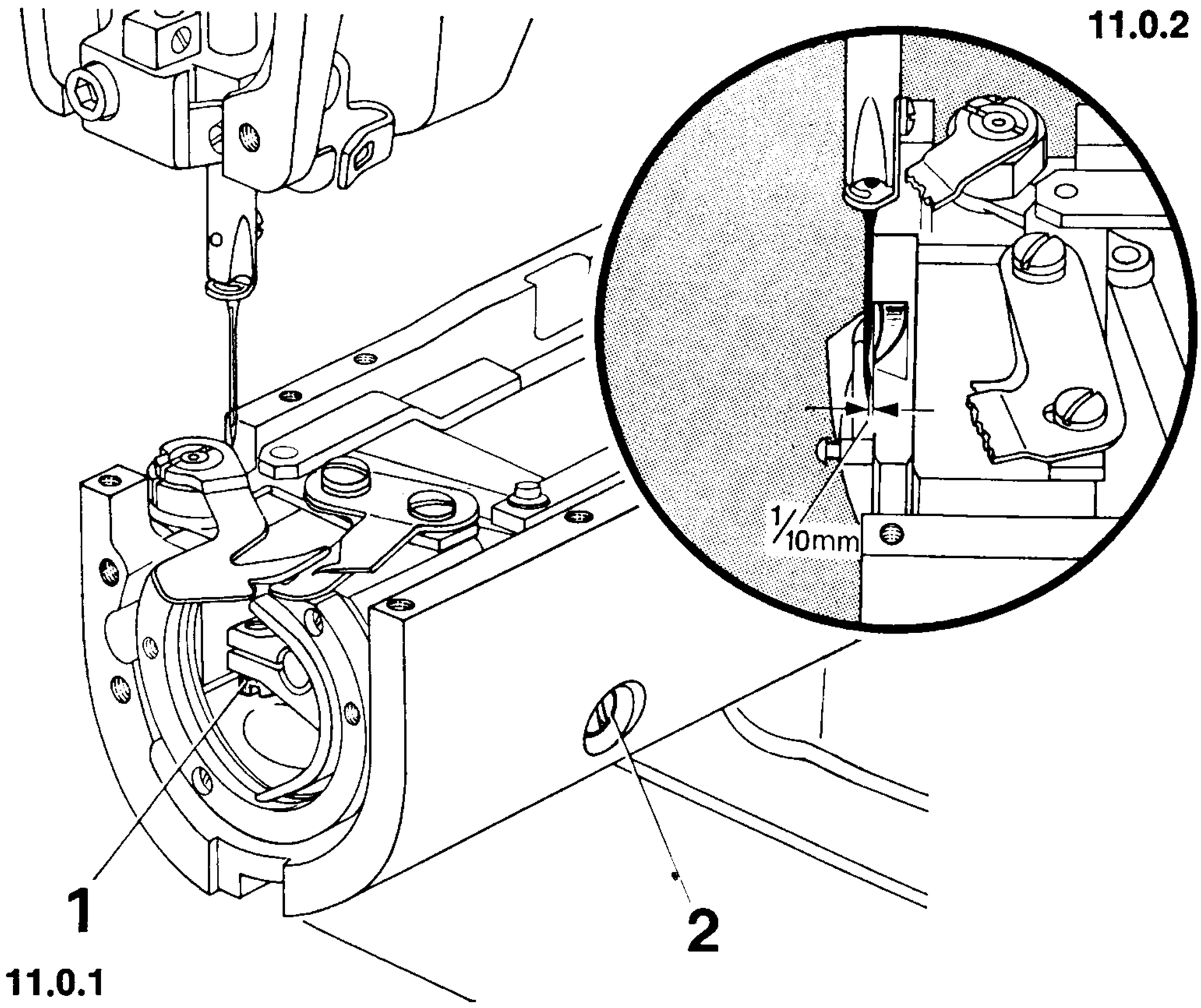

11.1 Loosen clamp screw **1** of the shuttle driver (Fig. 11.0.1) and pull the latter off its shaft.

11.2. Turn screw **2** on the right-hand side of the cylinder bed out a few turns, then hit it on the head to release the cotter underneath.

11.3 Replace the shuttle in its race and hold it fast.

11.4 Rotate the V-belt pulley and simultaneously turn the shuttle until its point is positioned exactly in the middle of the needle scarf.

11.5 **In this position, move the shuttle driver shaft bearing (together with the shuttle race) lengthwise of the cylinder bed until there is a clearance of 0.1 mm between the point of the shuttle and the needle** (Fig. 11.0.2).

11.6 Take the shuttle out of the shuttle race.

11.7 Tighten screw **2** of the cotter which secures the shuttle driver shaft bearing in position.

11.8 Check this adjustment (see "Correct setting").

12 Endwise position of shuttle driver shaft

Correct setting:	There should be a clearance of 1.3 mm between the wall of the arm standard and the gear on the shuttle driver shaft (Fig. 12.0.2).

Machine position: Master switch off, stop mechanism disengaged.

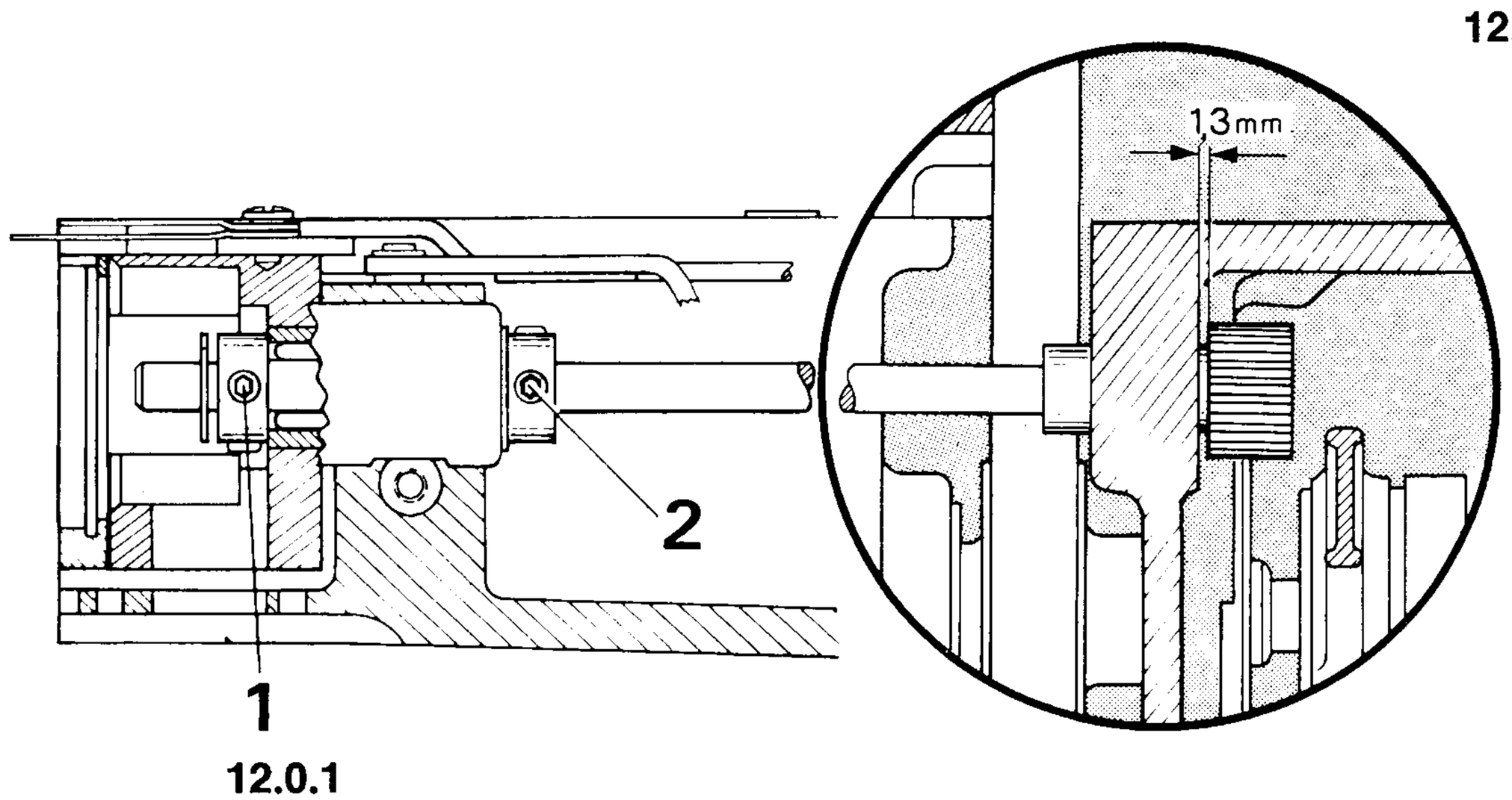

12.1 Loosen both screws **1** in the front collar of the shuttle driver shaft (Fig. 12.0.1).

12.2 Also loosen both screws **2** in the rear collar of the shuttle driver shaft.

12.3 Turn the V-belt pulley to bring the needle bar to its **highest** point.

12.4 Pull the shuttle driver shaft forward as far as it will go.

12.5 Push the rear collar up against the shuttle driver shaft bearing. Making sure one screw points to the **right** and the other faces **upwards,** tighten the accessible screw **2.**

12.6 **Push the shuttle driver shaft toward the rear again until there is a clearance of abt. 1.3 mm between the rear collar and the shuttle driver shaft bearing.**

12.7 In this position push the front collar up against the bearing. Making sure one screw faces **downwards** and the other to the **upper left,** tighten the lower screw **1.**

12.8 **Slightly loosen screw 2 tightened previously and, while lightly pushing against the front end of the shuttle driver shaft, push the rear collar up against the bearing. In this way, a clearance of 1.3 mm is provided between the wall of the arm standard and the gear on the shuttle driver shaft** (Fig. 12.0.2).

12.9 In this position, tighten both screws **2.**

12.10 Then tighten the two screws **1** on the front collar, too.

Note: The shuttle driver shaft should turn lightly without having any end play.

13 Shuttle driver finger

Correct setting:

When the needle is at the bottom of its stroke, the needle deflecting surface of the shuttle driver finger should lightly contact the needle, without deflecting it (Fig. 13.0.2).

Machine position: Master switch off, stop mechanism disengaged.

13.0.2

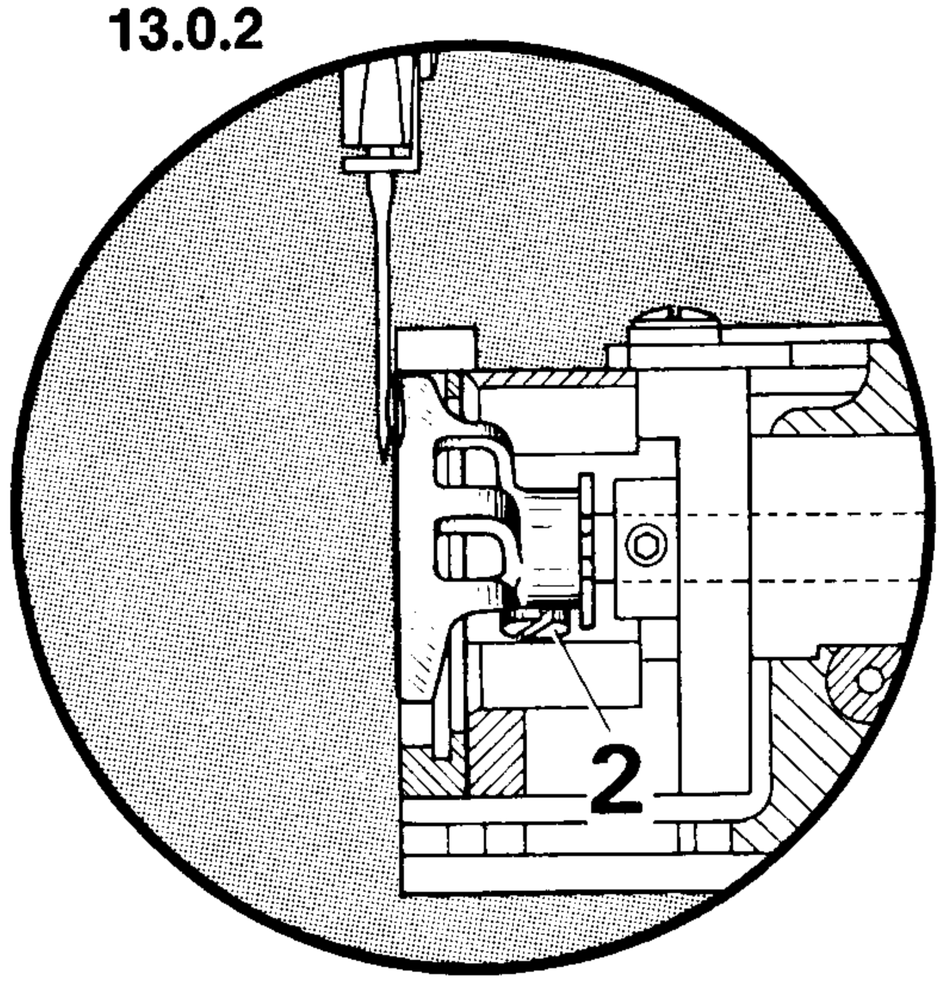

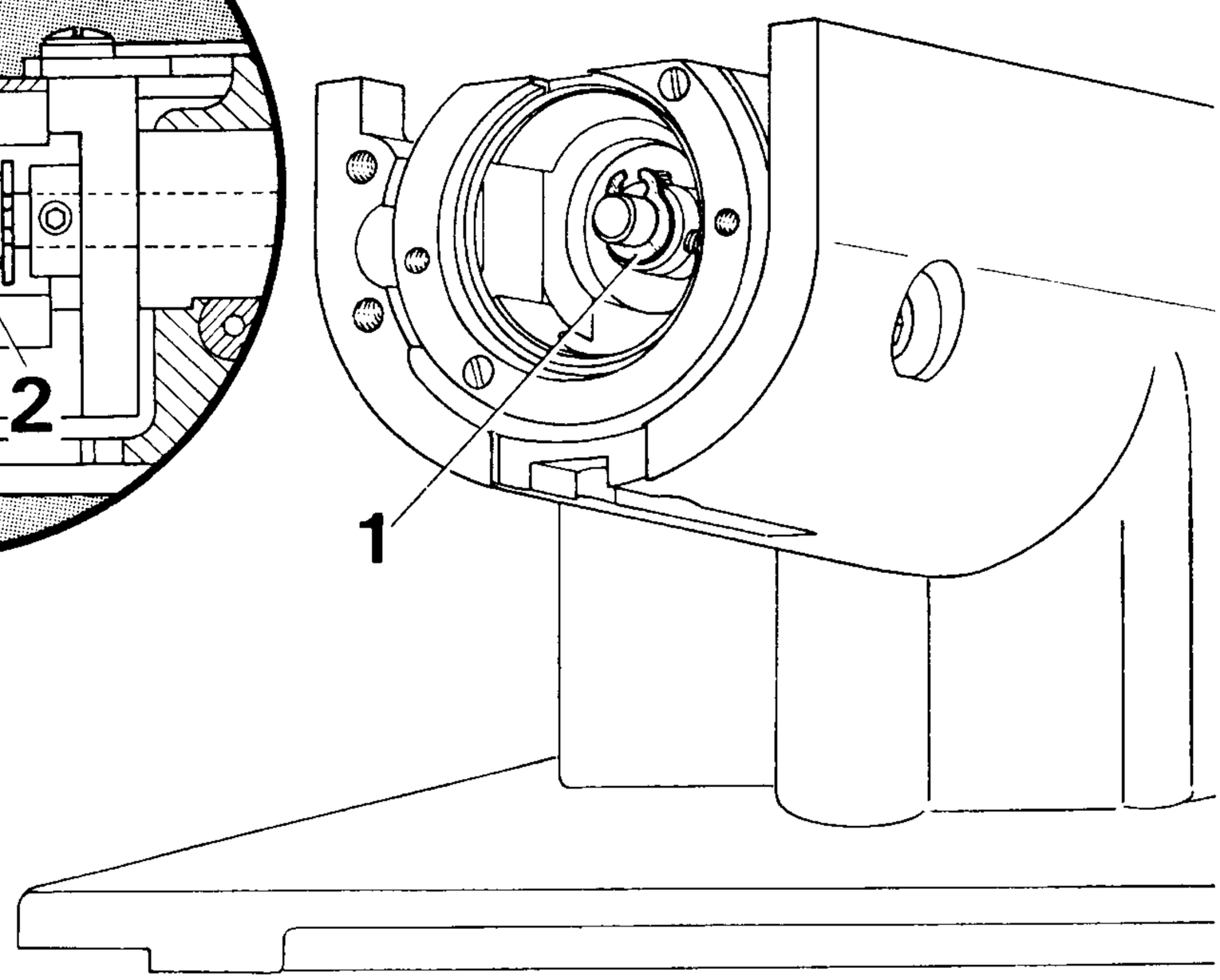

13.0.1

13.1 Prize circlip **1** on the shuttle driver shaft forward (Fig. 13.0.1).

13.2 Bring the needle bar to its **lowest** point.

13.3 Place the shuttle driver on its shaft and push it up against circlip **1.**

13.4 **Tap the shuttle driver back until, when you turn the shuttle driver, its finger passes as close to the needle as possible, without deflecting it.**

13.5 In this position, lightly tighten clamp screw **2** of the shuttle driver (Fig. 13.0.2).

14 Shuttle driver play

Correct setting: The shuttle driver should have no radial play, i. e. both gears should be closely meshed (Fig. 14.0.2), but light running of the machine should still be ensured.

Machine position: Master switch off, stop mechanism disengaged.

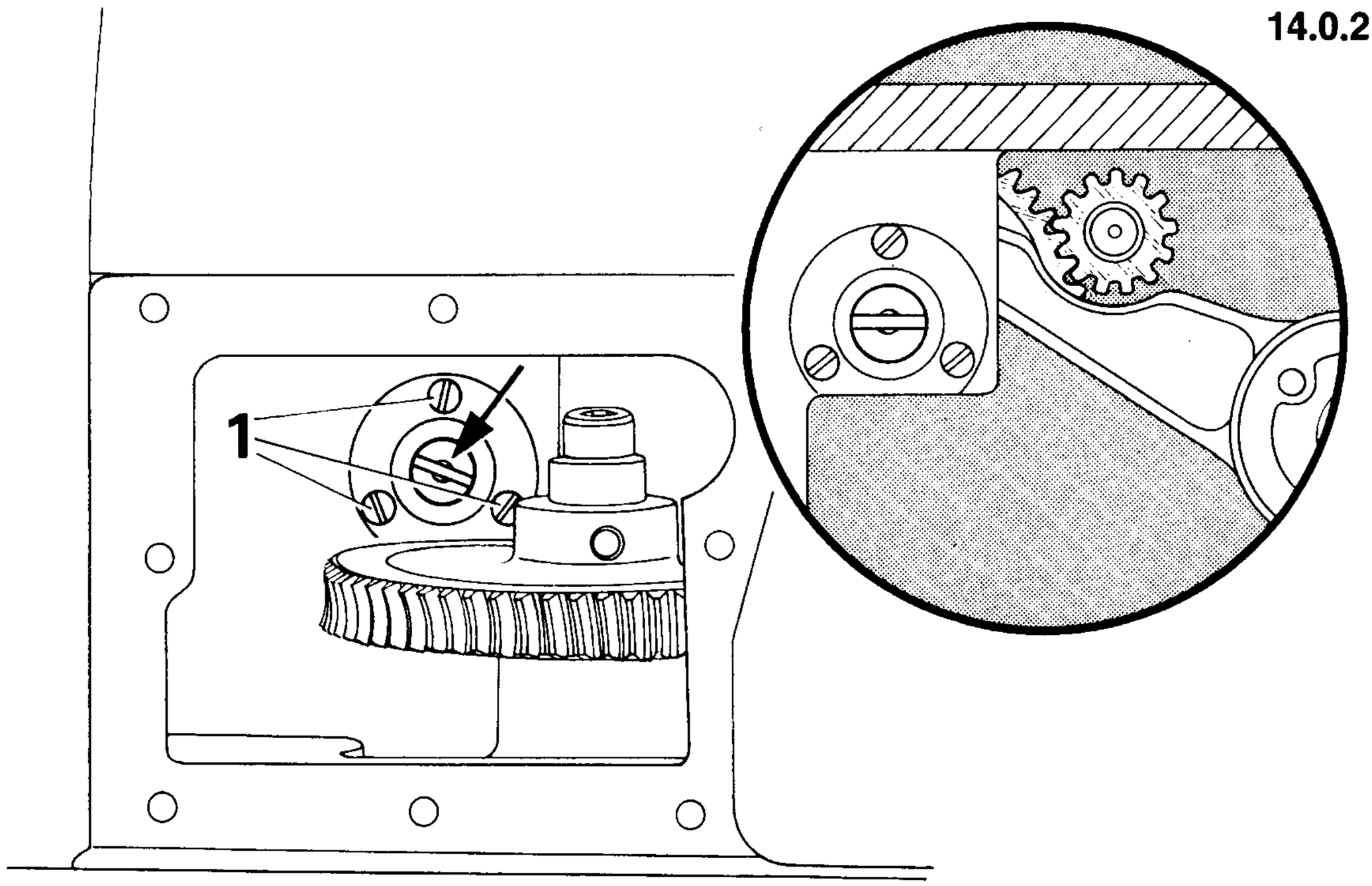

14.0.1

14.1 Unscrew both nuts of the bobbin winder on the back of the machine and strip the bobbin winder.

14.2 Take out the eight screws of the bearing plate underneath and remove the plate.

14.3 Loosen the three screws **1** in the eccentric bearing bushing exposed now (Fig. 14.0.1).

14.4 **Turn the eccentric stud with the aid of a screwdriver (see arrow in Fig. 14.0.1) until the shuttle driver no longer has any radial play, but light running of the machine is preserved.**

14.5 In this position, evenly tighten all three screws **1.**

15 Shuttle driver timing

Correct setting:

When the needle bar is at its lowest point, the shuttle point should be at its left point of reversal (Fig. 15.0.4).

Machine position: Master switch off, stop mechanism disengaged.

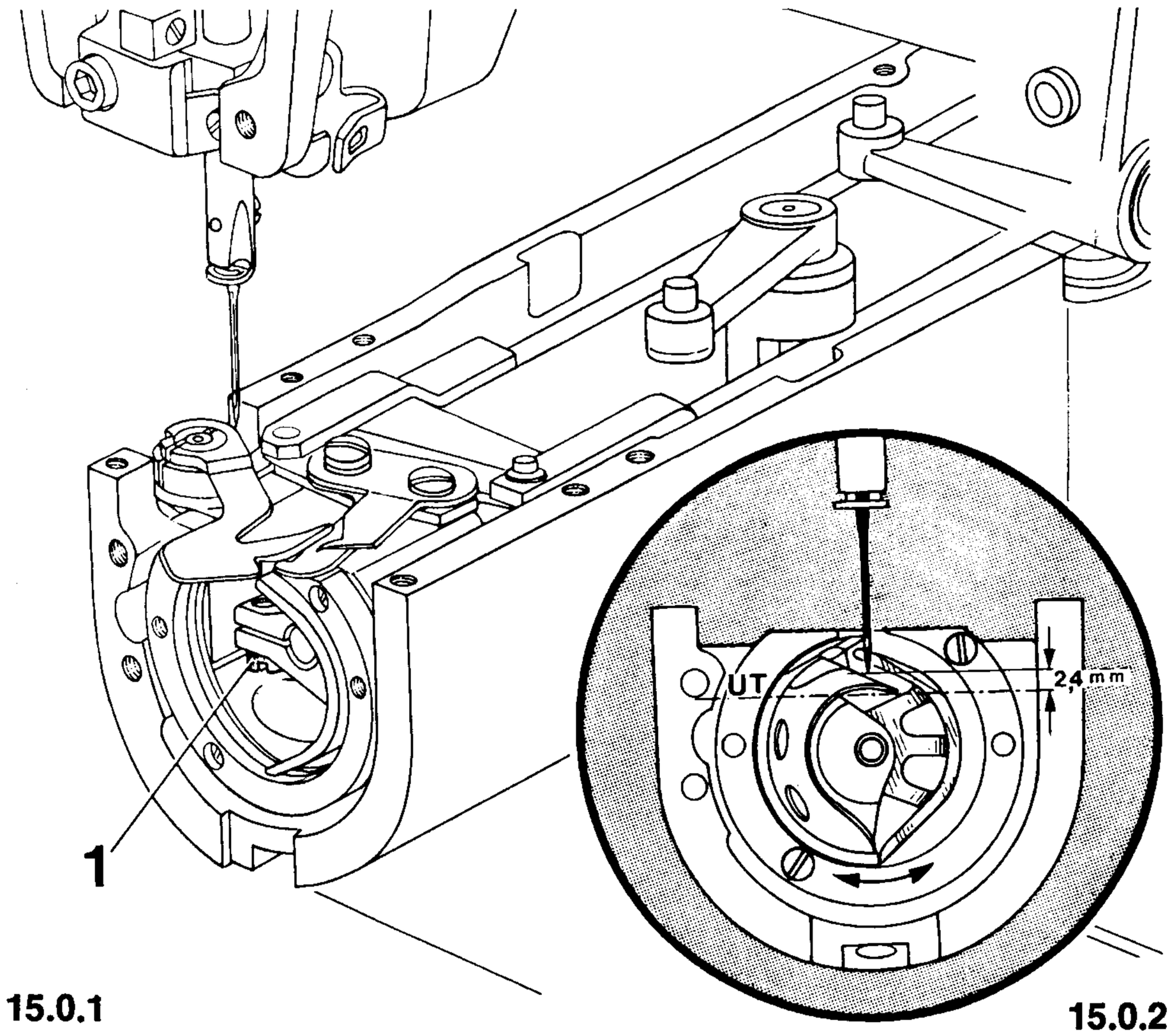

15.0.1 15.0.2

15.1 Check to make sure that the **first** screw (in sewing direction) of all parts located on the arm shaft, e. g. spur gear, eccentric and worm, is positioned on the flat or in the groove, and that all screws are securely tightened.

15.2 Loosen clamp screw **1** of the shuttle driver (Fig. 15.0.1) just sufficiently to allow the latter to be turned on its shaft against resistance.

15.3 Replace the shuttle in the shuttle race.

15.4 Bring the needle bar to its lowest point.

15.5 Set the machine for a needle bar rise of 2.4 mm (with the aid of the C-clamp).

15.6 **Turn the shuttle, together with the shuttle driver, so that its point is positioned exactly behind the needle** (Fig. 15.0.2).

15.7 **Turn the V-belt pulley backwards until the C-clamp again contacts the needle bar frame. In this position, the shuttle point must again be positioned exactly behind the needle** (Fig. 15.0.2).

Continued on next page

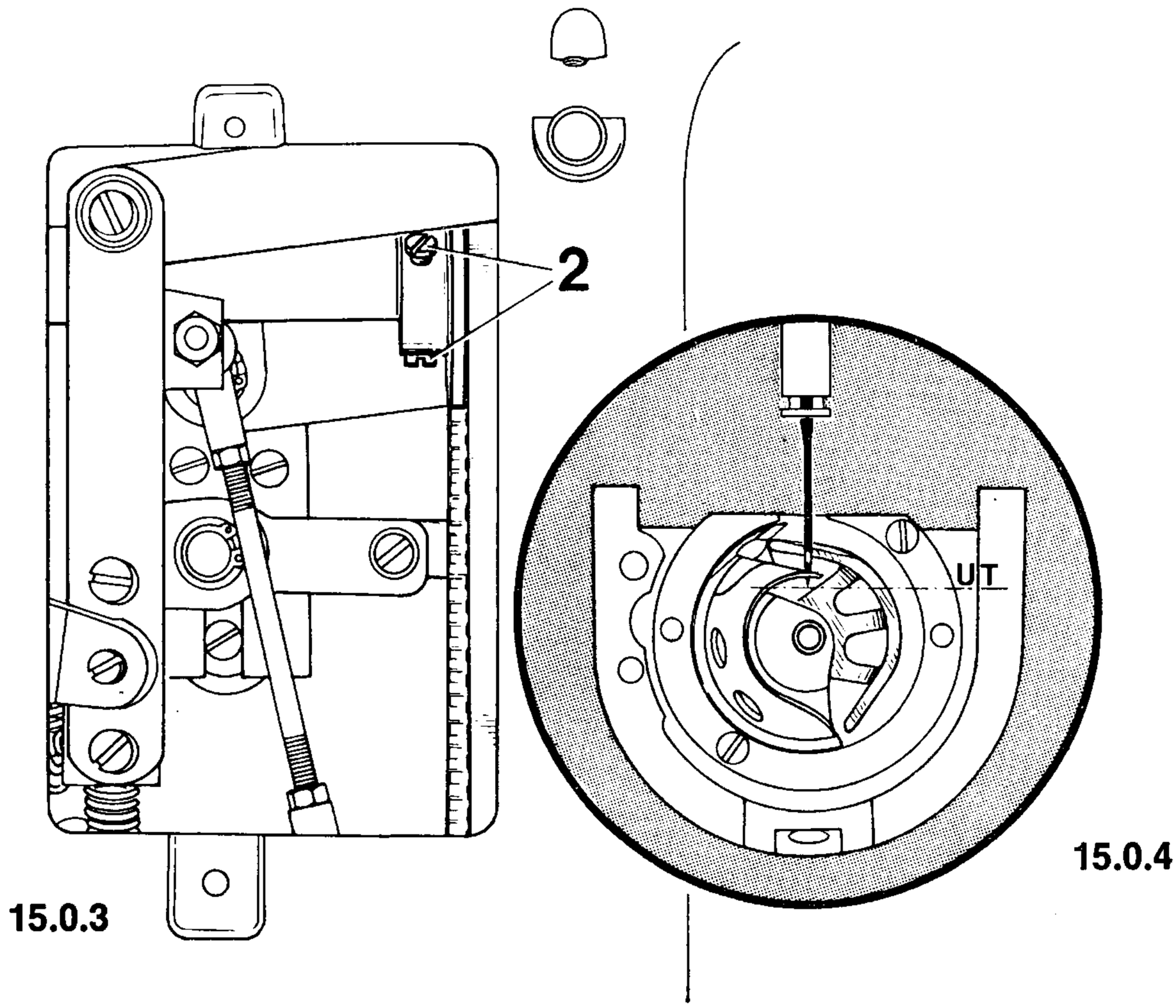

15.8 If the shuttle point is not positioned **exactly** behind the needle, proceed as follows:

15.9 Remove the C-clamp.

15.10 Through the access window loosen the three screws **2** of the belt sprocket on the arm shaft (Fig. 15.0.3) just sufficiently to allow the belt sprocket to be turned against resistance.

15.11 Hold the V-belt pulley fast, while slightly turning the belt sprocket.

15.12 **Adjust the needle bar rise and repeat adjustments 15.6 and 15.7 until the shuttle point is exactly behind the needle each time the C-clamp contacts the needle bar frame when the V-belt pulley is turned forwards, then backwards.**

15.13 Tighten the accessible screw **2,** making sure that the belt sprocket contacts its bearing on the right.

15.14 Remove the C-clamp from the needle bar.

15.15 Turn the V-belt pulley so that the two remaining screws **2** become accessible and tighten each securely.

15.16 Check this adjustment (see "Correct setting").

15.17 Take the shuttle out of its race and tighten clamp screw **1** of the shuttle driver securely (Fig. 15.0.1).

16 Shuttle race

Correct setting:

There should be an equal amount of play between shuttle and shuttle driver at either point of reversal (for thread passage).

Machine position: Master switch off, stop mechanism disengaged.

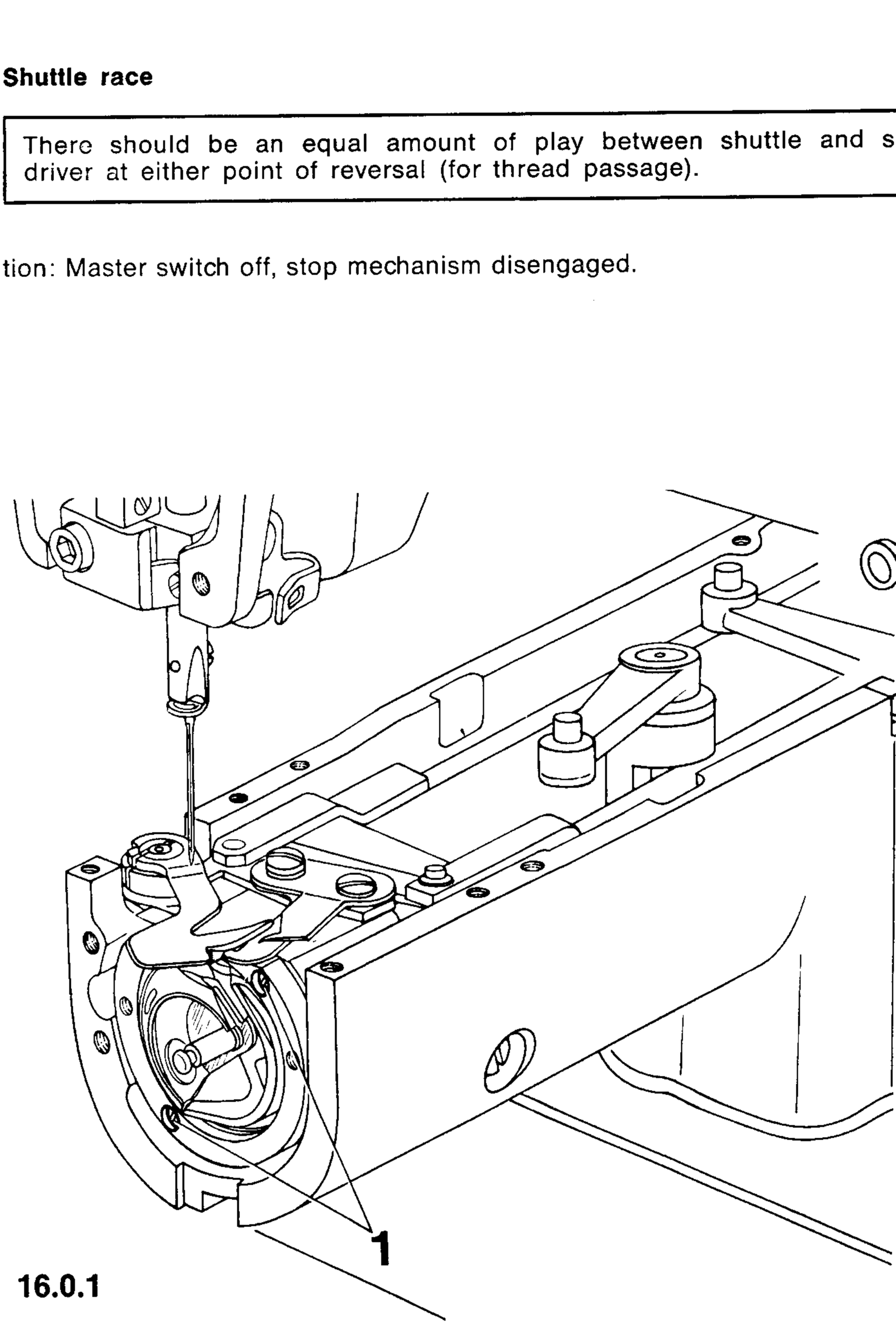

16.0.1

16.1 Loosen both screws **1** of the shuttle race (Fig. 16.0.1).

16.2 Insert the shuttle in the shuttle race.

16.3 Adjust the shuttle race so that there is the same amount of play between shuttle and shuttle driver at either point of reversal.

16.4 In this position, tighten both screws **1.**

16.5 Check this adjustment (see "Correct setting").

17 Needle bar height

Correct setting:

When the shuttle point is positioned exactly opposite the center line of the needle, the lower edge of the shuttle point should be positioned **1.5 mm** above the top of the needle eye (Fig. 17.0.2).

Machine position: Master switch off, stop mechanism disengaged.

17.0.1

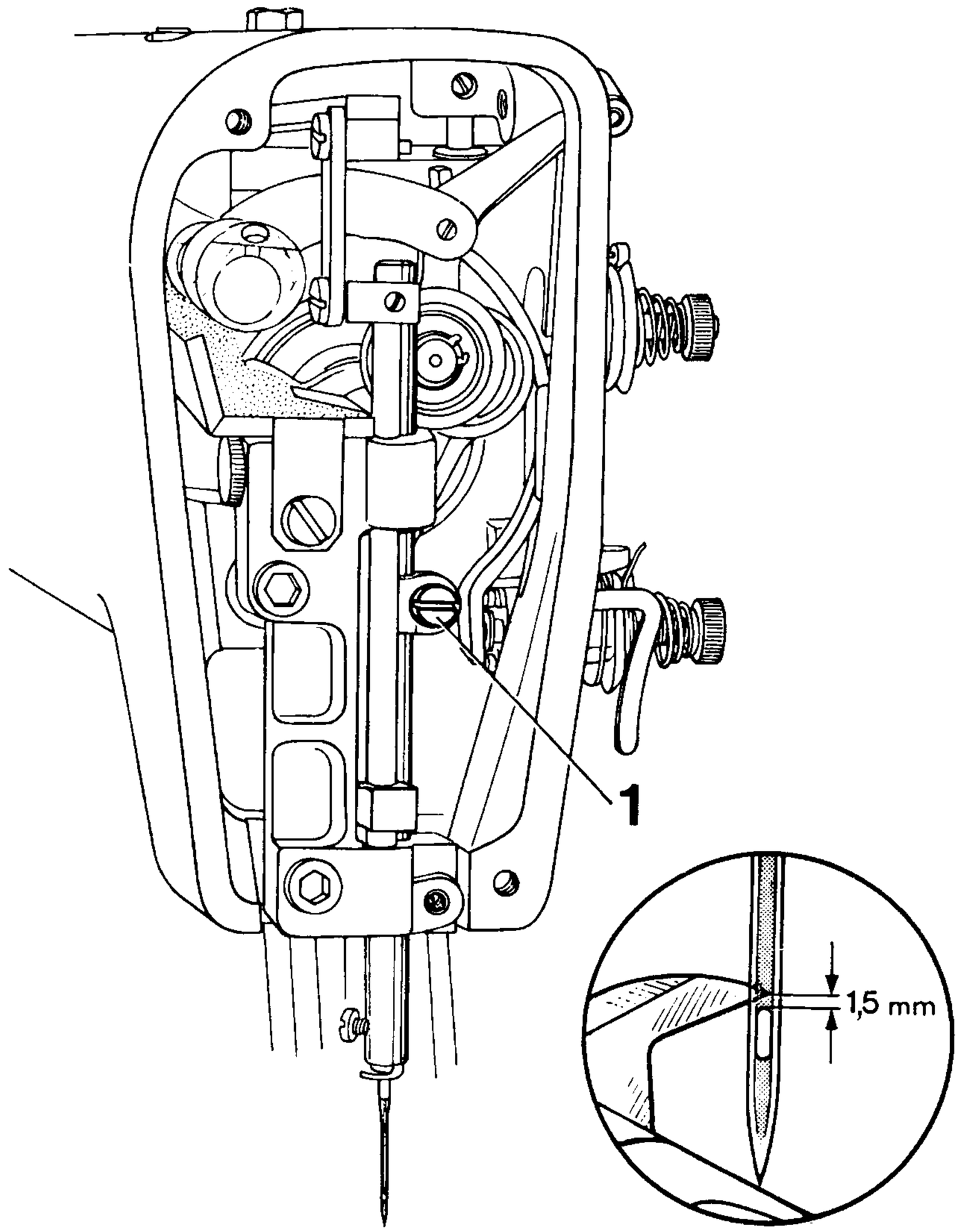

17.0.2

17.1 Turn the V-belt pulley in its normal direction until the shuttle point is exactly opposite the center line of the needle.

17.2 Loosen clamp screw **1** on the needle bar connecting stud (Fig. 17.0.1).

17.3 **Move the needle bar up or down until the lower edge of the shuttle point is positioned 1.5 mm above the top of the needle eye.**

17.4 In this position, tighten clamp screw **1,** making sure that the thread guide screw on the needle bar points toward the rear.

17.5 Screw on the shuttle race cover, making sure it does not lose its resilience.

17.6 Operate the starting latch so that it clears the locking lever, then turn the clutch disc in its normal direction of rotation until the stop motion mechanism has stopped the machine.

18 Bobbin thread puller and knife *)

Correct setting:

There should be a clearance of **53 mm** between the tip of the bobbin thread puller and the inside edge of screwhole **6** when the clamp lifting lever is operated.
The distance from the cutting edge of the knife to the inside edge of screwhole **6** should be **38 mm** (Fig. 18.0.2).

Machine position: Master switch off, end-of-cycle position.

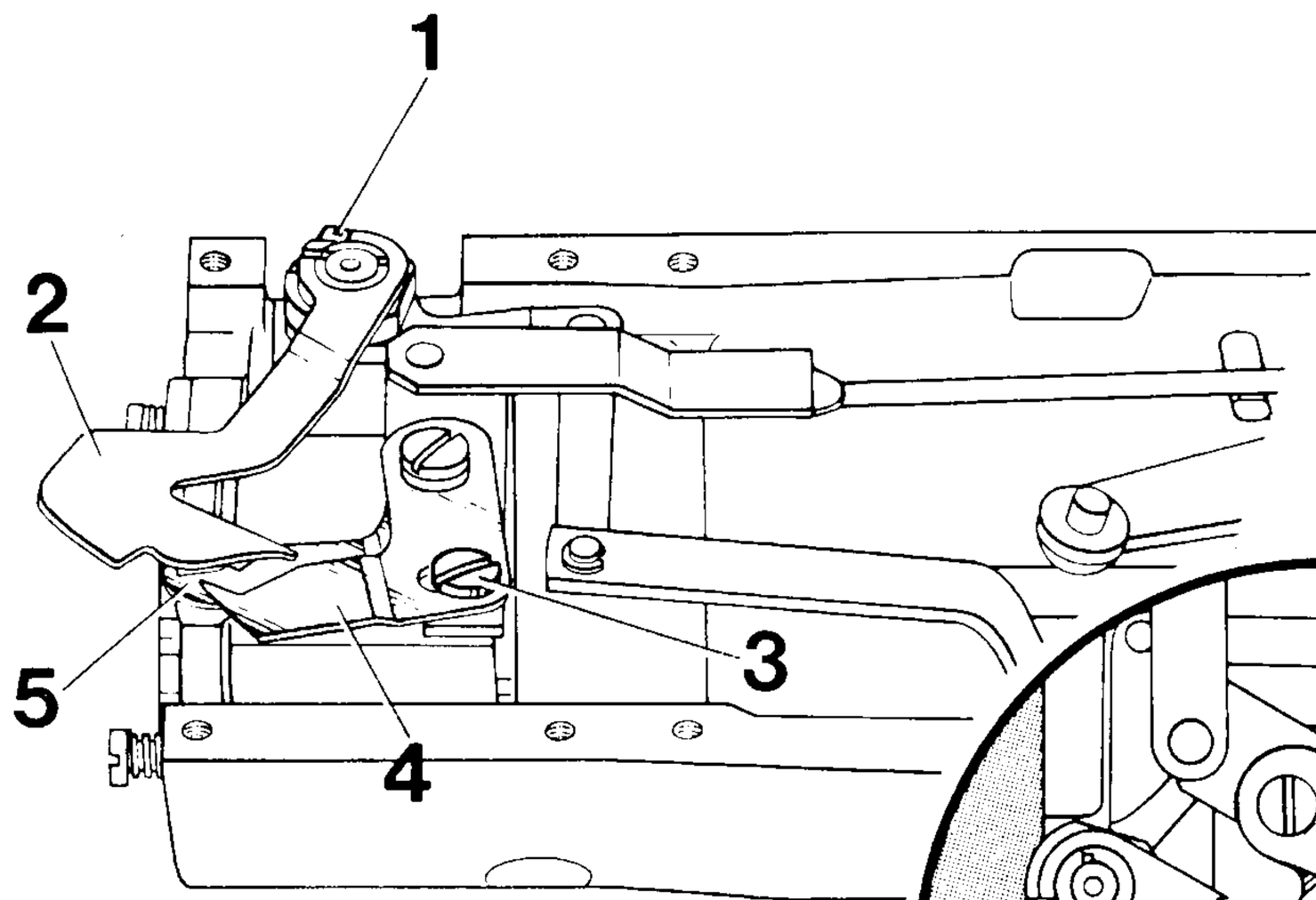

18.0.1

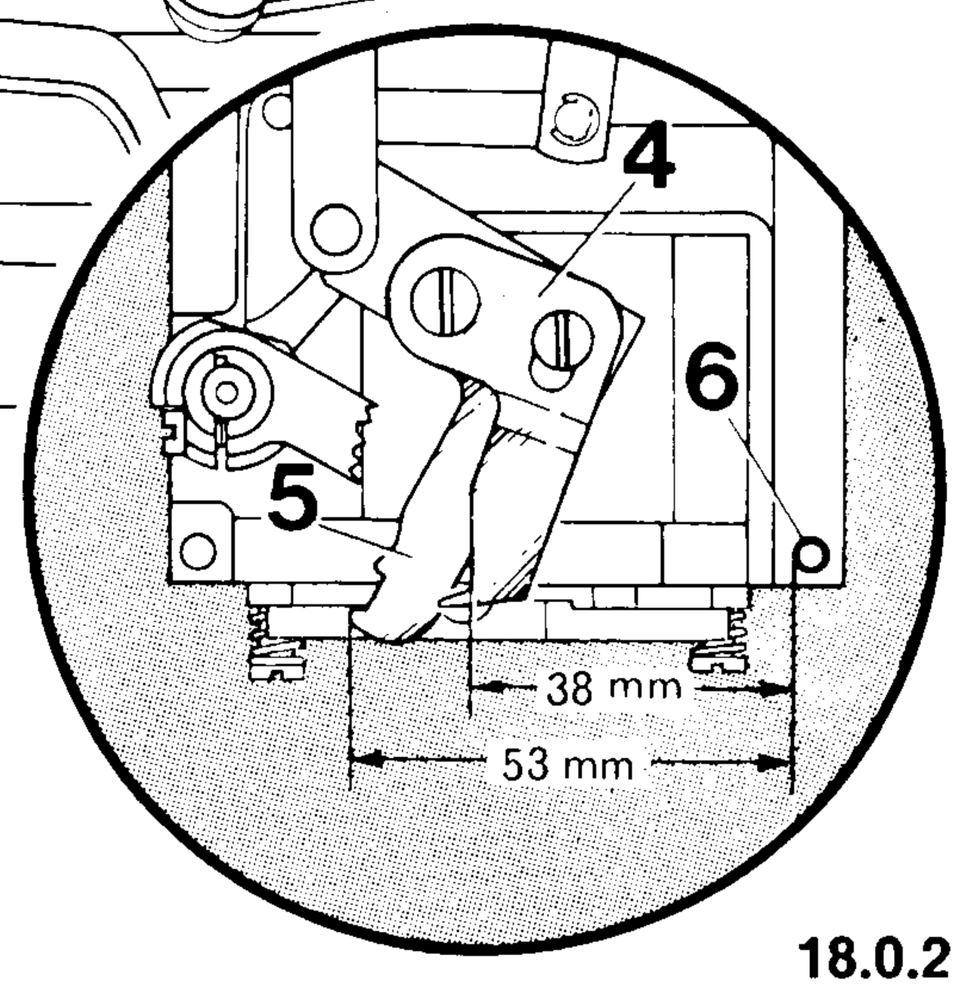

18.0.2

18.1 Loosen clamp screw **1** of needle thread catcher **2** (Fig. 18.0.1), swing the latter toward the left, and tighten clamp screw **1** lightly again.

18.2 Loosen screw **3** just sufficiently to allow knife **4** and bobbin thread puller **5** to be moved against resistance.

18.3 Operate the clamp lifting lever to bring knife **4** and bobbin thread puller **5** to their forward point of reversal, then block the clamp lifting lever in this position.

18.4 **Adjust bobbin thread puller 5 and knife 4 so that there is a clearance of 53 mm and 38 mm, respectively, between these parts and the inside edge of screwhole 6 in the needle plate** (Fig. 18.0.2).

18.5 In this position, tighten screw **3** of knife **4** and bobbin thread puller **5,** making sure the latter is set as close above the shuttle race as possible, without actually contacting it.

18.6 Check this adjustment (see "Correct setting").

*) Adjustment can be made with gauge No. 61-111 635-21 (see Section 37).

19 Mounting the feed cam

Correct setting:

The feed cam should be fitted so that there is no backlash between both spur gears, but the machine still turns freely.

Machine position: Master switch off, end-of-cycle position.

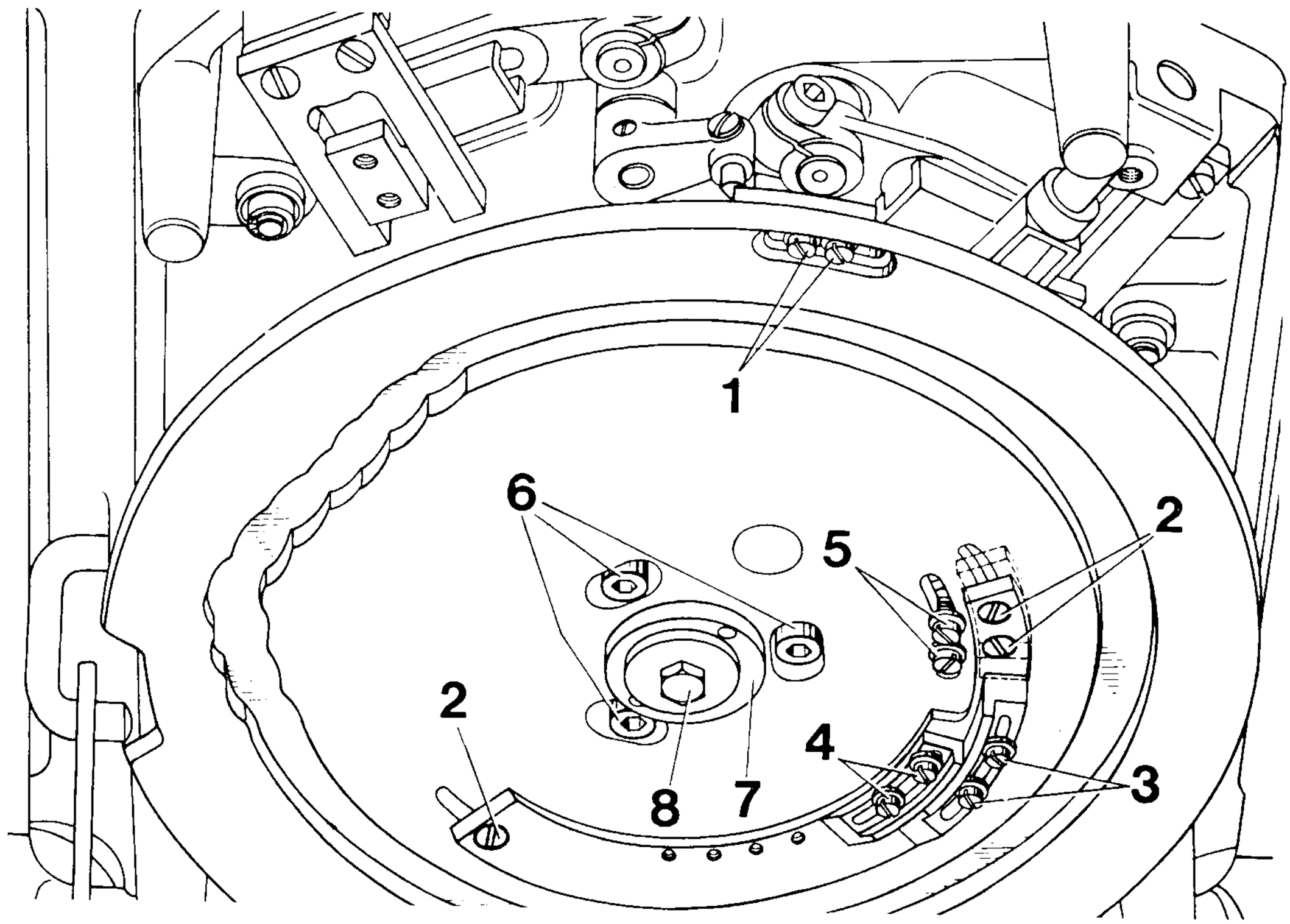

19.0.1

19.1 Loosen screws **1, 2, 3, 4** and **5** and the three allen screws **6** of the feed cam (Fig. 19.0.1).

19.2 **Set screws 1 to 6 in the middle of their slots and tighten them again.**

19.3 Insert eccentric bushing **7** in the feed cam and turn it so that its lobe points upwards, i. e. toward the thread catcher tripping segment on the rim of the feed cam.

19.4 Mount the feed cam so that the cutout in its rim is on the left and the roller of the right-hand roller lever is positioned in the channel on the upper side of the cam.

19.5 Insert the cap washer into eccentric bushing **7** (making sure its pin enters the hole), and turn in hexagon screw **8** by hand as far as it will go.

19.6 **Turn eccentric bushing 7 clockwise until there is no backlash between both spur gears, but the machine still turns freely.**

19.7 Tighten hexagon screw **8.**

19.8 Mount the roller lever on the left-hand feed motion segment, and adjust the latter so that the roller is positioned in the channel track.

19.9 In this position, screw down the roller lever.

Correct setting:

The operative feed motion lever should make half its motion before, and the other half after, the needle bar has reached its highest point (Fig. 20.0.2).

Machine position: Master switch off, stop mechanism disengaged.

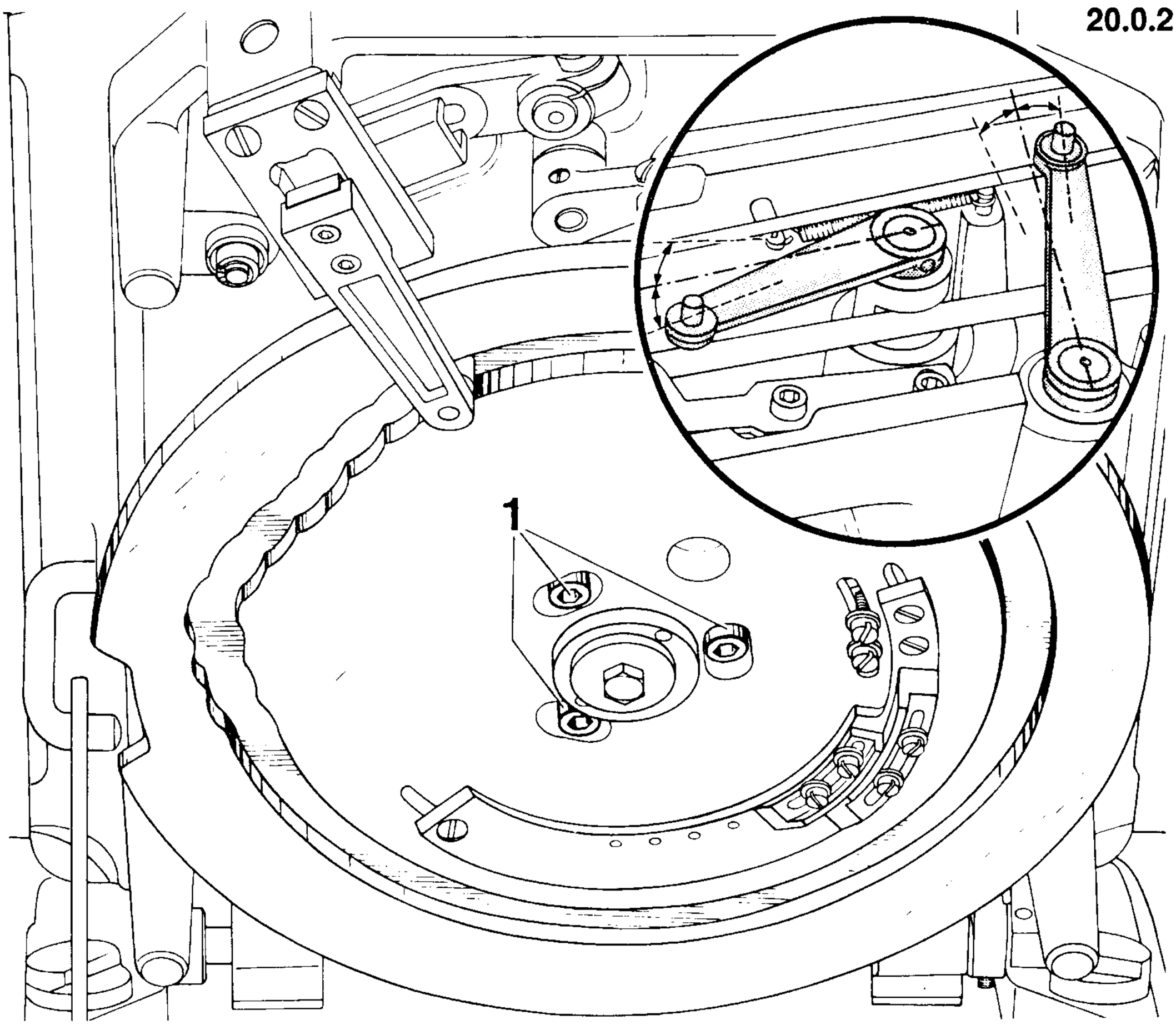

20.0.1

20.1 Operate the starting lever.

20.2 Turn the V-belt pulley while watching the needle and the feed motion levers in the cylinder bed. Each lever should make half its motion **before,** and the other half **after,** the needle bar has reached its **highest** point.

20.3 If adjustment is required, loosen the three allen screws **1** (Fig. 20.0.1) and turn the feed cam on its shaft accordingly.

20.4 Securely tighten all three screws **1.**

20.5 Check this adjustment (see "Correct setting").

21 Stop tripping segment

Correct setting:

The machine should stop when the take-up lever descending for the last stitch is positioned abt. **50 mm** above its bottom dead center (Fig. 21.0.2). Machines operating at a top speed of 1600 s.p.m. should stop when the take-up lever descending for the last stitch is positioned abt. **25 mm** above its bottom dead center (Fig. 21.0.2).

Machine position: Master switch off, stop mechanism disengaged.

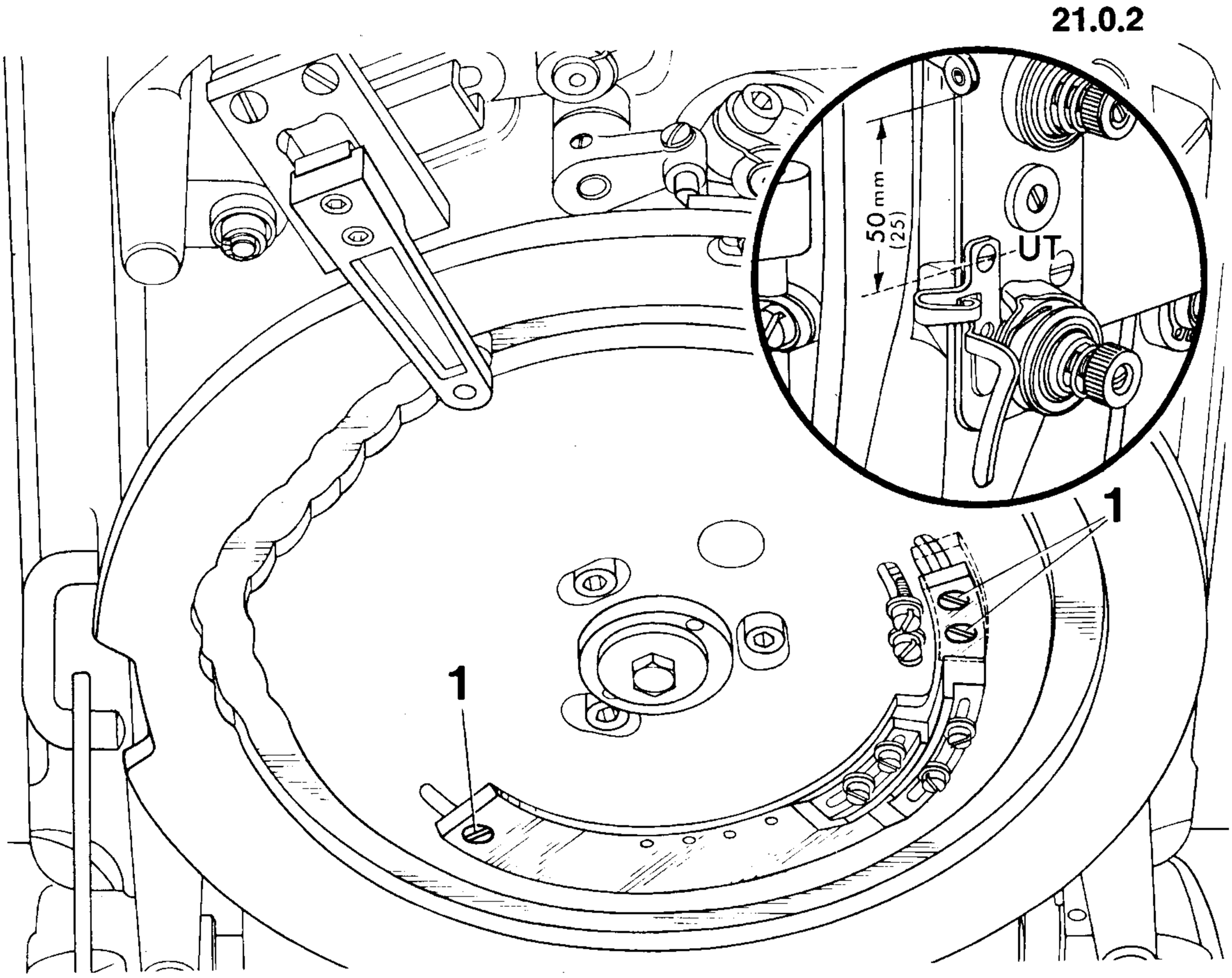

21.0.1

21.1 Operate the starting lever and turn the V-belt pulley **backwards** about **two** turns.

21.2 Loosen the three screws **1** of the segment on the feed cam (Fig. 21.0.1).

21.3 **If the machine stops too late, set the segment earlier, if it stops too early, set it later. Securely tighten the three screws 1 again.**

21.4 Check again to see if the machine stops with the take-up lever exactly 50 mm (or 25 mm) above its bottom dead center. If it does not, repeat the foregoing adjustment until it does.

21.5 Turn the **clutch disc** in its normal direction of rotation until the machine has completed its cycle and stopped. It is now in its starting position.

21.6 Check this adjustment (see "Correct setting").

Correct setting:

When the thread catcher is fully operated by its tripping segment, there should be a clearance of 0.3 mm between its crank and the wall of the cylinder bed (Fig. 22.0.2).

Machine position: Master switch off, end-of-cycle position.

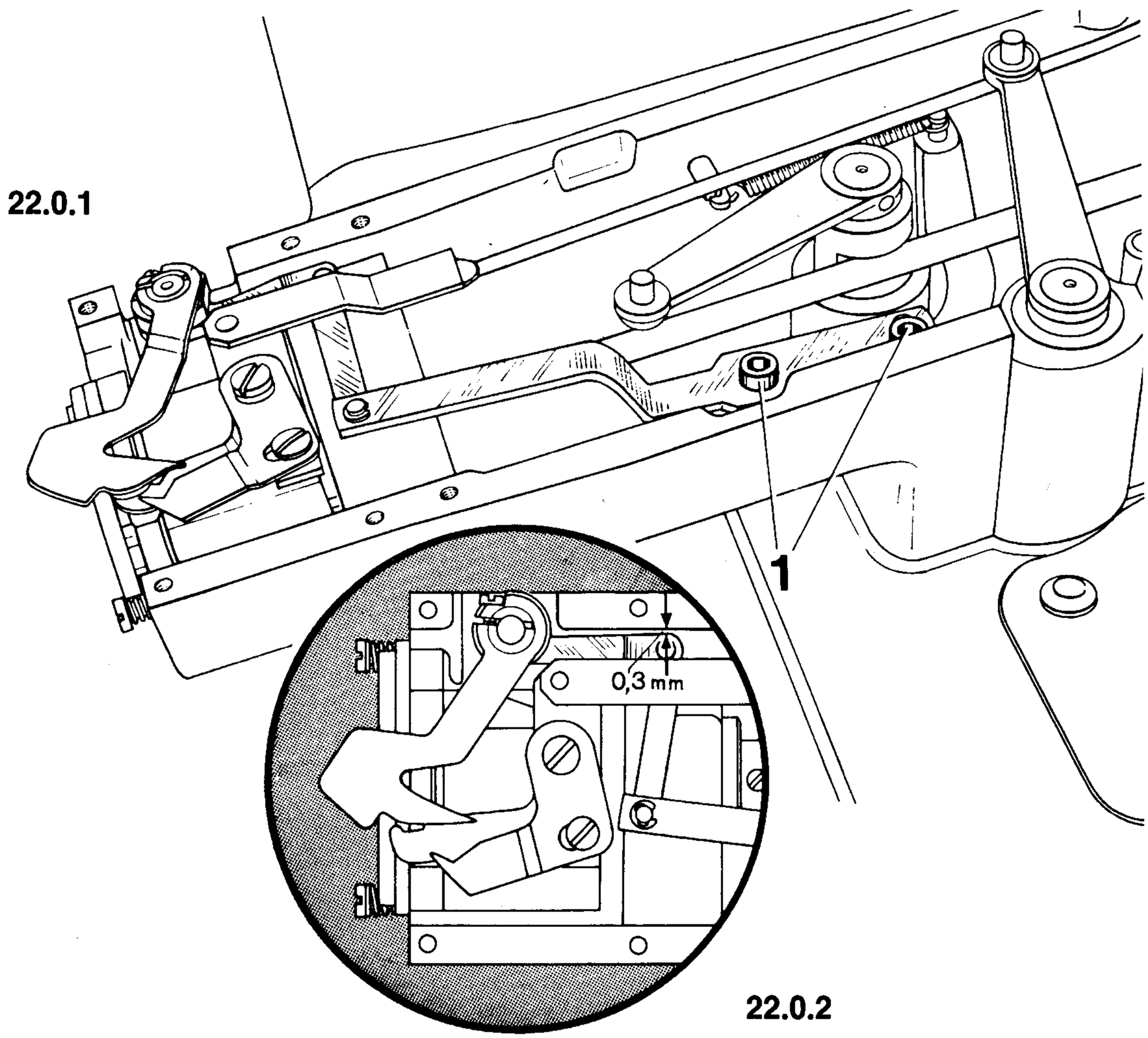

22.0.1

22.0.2

22.1 Check to make sure the machine is in its starting position and the tripping stud of the needle thread catcher is at the highest point of its tripping segment. In this position, loosen screws **1** of the two-part thread catcher actuating rod (Fig. 22.0.1).

22.2 **Set a clearance of 0.3 mm between the thread catcher crank and the left wall of the cylinder bed** (Fig. 22.0.2).

22.3 In this position, securely tighten first the front, then the rear screw **1** of the actuating rod.

22.4 Check this adjustment (see "Correct setting").

23 Thread catcher setting *)

Correct setting:

> When the thread catcher crank contacts the wall of the cylinder bed (see arrow in Fig. 23.0.2), the thread catcher should contact the needle just lightly. When the thread catcher is in its starting position, there should be a clearance of **4 mm** between catcher tip and needle (Fig. 23.0.3). Furthermore, the thread catcher should pass freely between knife and bobbin thread puller without striking one of these parts.

Machine position: Master switch off, end-of-cycle position, stop mechanism disengaged.

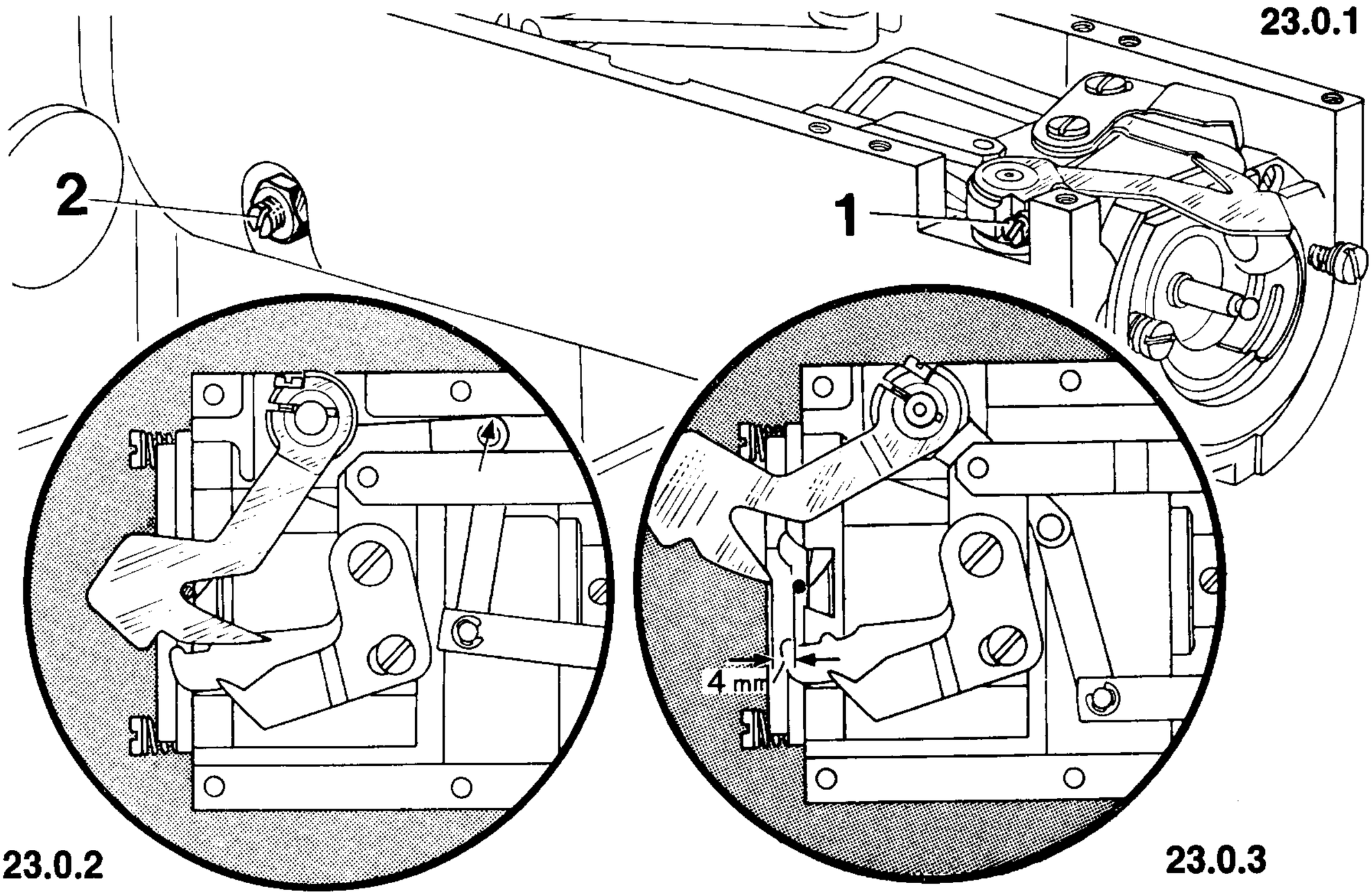

23.1 Operate the starting lever and turn the V-belt pulley to bring the needle bar to its lowest point. During this phase of the machine cycle, the thread catcher tripping stud must have cleared the tripping segment.

23.2 Loosen clamp screw **1** (Fig. 23.0.1) just sufficiently to allow the thread catcher to be turned on its shaft against resistance.

23.3 Press the thread catcher actuating rod toward the left as far as it will go so that the thread catcher crank contacts the wall of the cylinder bed (see arrow in Fig. 23.0.2) and hold it in this position.

23.4 Swing the needle thread catcher inwards until it contacts the needle just lightly.

23.5 **Securely tighten clamp screw 1, making sure that the thread catcher passes freely between knife and bobbin thread puller without striking one of these parts.**
When the actuating rod is released, the thread catcher should return to its starting position.

23.6 **Loosen the locknut on screw 2 and turn the latter until there is a clearance of 4 mm between the needle and the tip of the thread catcher when the latter is in its starting position** (Fig. 23.0.3).

23.7 In this position, tighten the locknut on screw **2.**

23.8 Operate the starting latch so that it clears the locking lever, lift the catcher actuating lever (to the right of the roller lever), and turn the clutch disc backwards until the machine is in its starting position.

23.9 Check this adjustment (see "Correct setting").

*) Adjustment can be made with gauge No. 61-111 635-21 (see Section 38).

Thread catcher timing

Correct setting:

The thread catcher should begin to move forward when the point of the advancing shuttle is exactly behind the needle as the last stitch of the sewing cycle is being made.

Machine position: Master switch off, end-of-cycle position, stop mechanism disengaged.

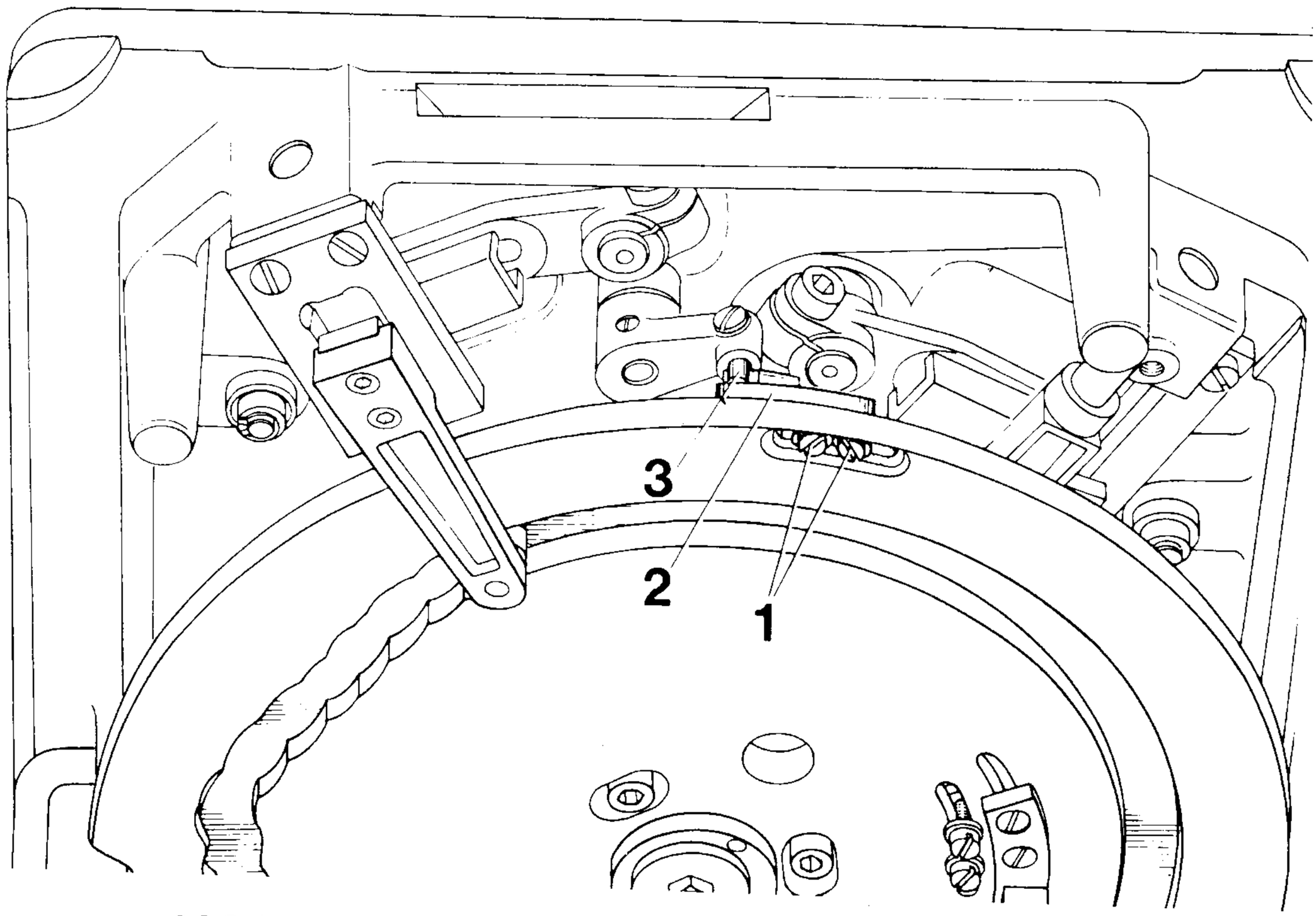

24.0.1

24.1 Operate the starting lever and turn the V-belt pulley **backwards** one turn.

24.2 Turn the V-belt pulley **in its normal direction** until the shuttle point is positioned **exactly** behind the ascending needle.

24.3 In this position, loosen both screws **1** and move tripping segment **2** all the way to the left (Fig. 24.0.1).

24.4 **Now move the tripping segment toward the right until stud 3 of the actuating lever contacts the inclined surface of the tripping segment.**

24.5 In this position, tighten both screws **1.**

24.6 Turn the V-belt pulley **backwards** half a turn, then slowly **forwards.** During this latter phase, the needle thread catcher should begin to move forward when the point of the advancing shuttle is exactly behind the needle.

24.7 Turn the **clutch disc** in its normal direction until the machine has completed its cycle and stopped. It is now in its starting position again.

24.8 Check this adjustment (see "Correct setting").

25 Stationary knife and trimming test

Correct setting:

There should be a clearance of 1 mm between the cutting edge of the knife and the edge of the needle hole (Fig. 25.0.2).

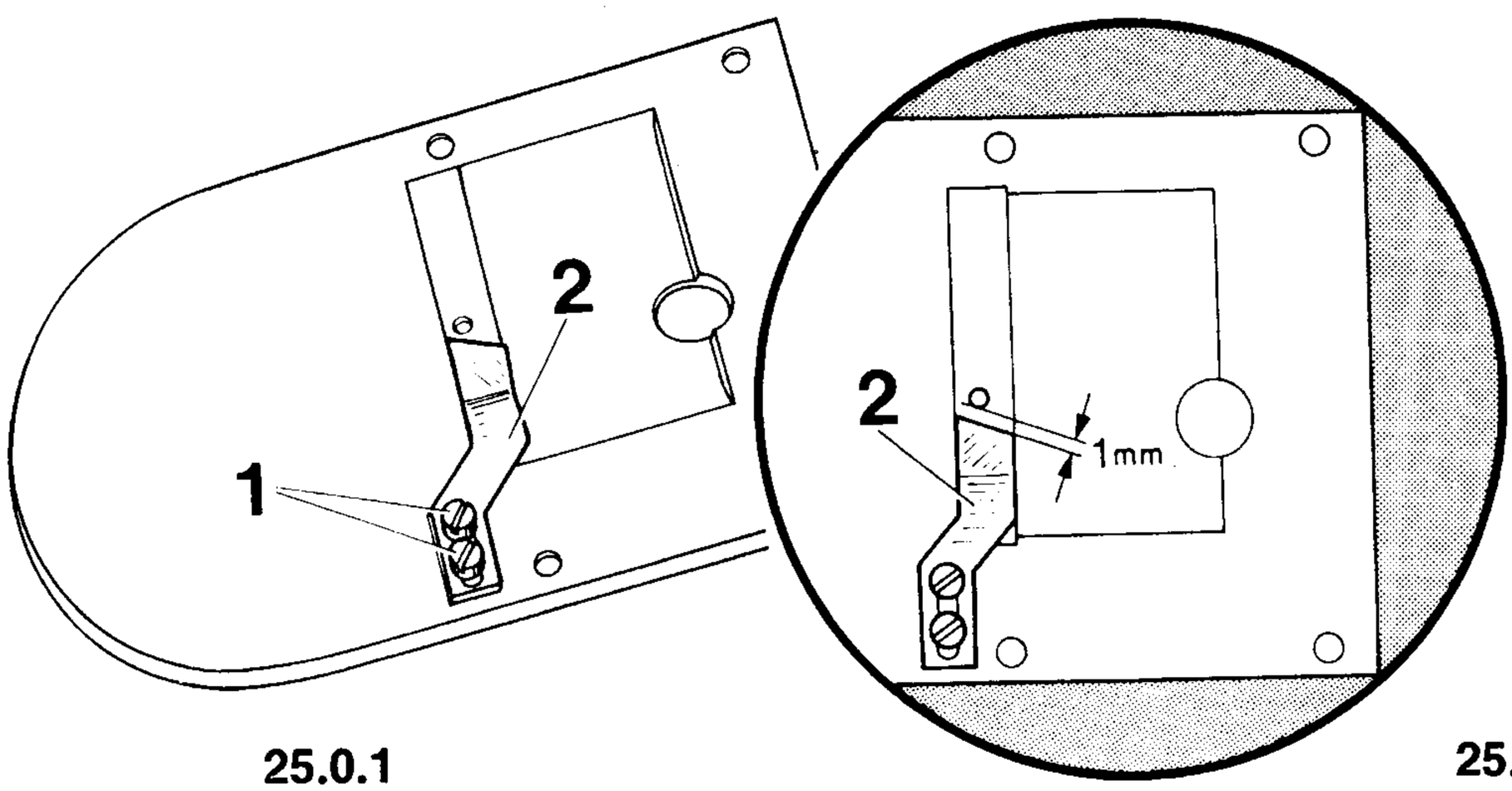

25.0.1 25.0.2

25.1 Loosen both screws **1** of stationary knife **2** on the underside of the needle plate (Fig. 25.0.1).

25.2 **Set the knife so that there is a clearance of 1 mm between its cutting edge and the edge of the needle hole** (Fig. 25.0.2).

25.3 In this position, tighten both screws **1.**

25.4 Screw on the needle plate.

25.5 To make a trimming test, pull two threads through the needle hole and operate the lifting lever by hand. Both threads should be trimmed perfectly.

25.6 If they are not, remove the needle plate and adjust the knife so that the left end of its cutting edge – as seen from the front – is a little higher than the right. This is to ensure a shearing action between both knives when the needle plate is screwed on again.

25.7 Screw on the cylinder bed top cover, insert the trunnion block into the bearing bushings of the machine and push it toward the rear as far as it will go. Place the two slide blocks on their studs, making sure that their smooth surfaces are facing upwards. Take care that the spacing washers are replaced, if any. Turn the rear slide block on its stud so that its long side faces toward the right.

25.8 Place the slide block guide over the rear slide block and screw it to the trunnion block with the aid of the two pan-head screws.

25.9 Replace the arch clamp, together with the feed bar and the feed plate, so that the front slide block enters the channel in the feed bar. Push both transverse shafts through the holes in the trunnion block and the arch clamp so that their ends protrude equally on both sides. Then tighten both transverse shaft screws in the arch clamp.

25.10 Check this adjustment (see "Correct setting").

26 Clamp feet

Correct setting:

The clamp feet should lift independently without chafing against each other. In addition, they should be centered in the cutout of the feed plate (Fig. 26.0.2).

Machine position: Master switch off, end-of-cycle position.

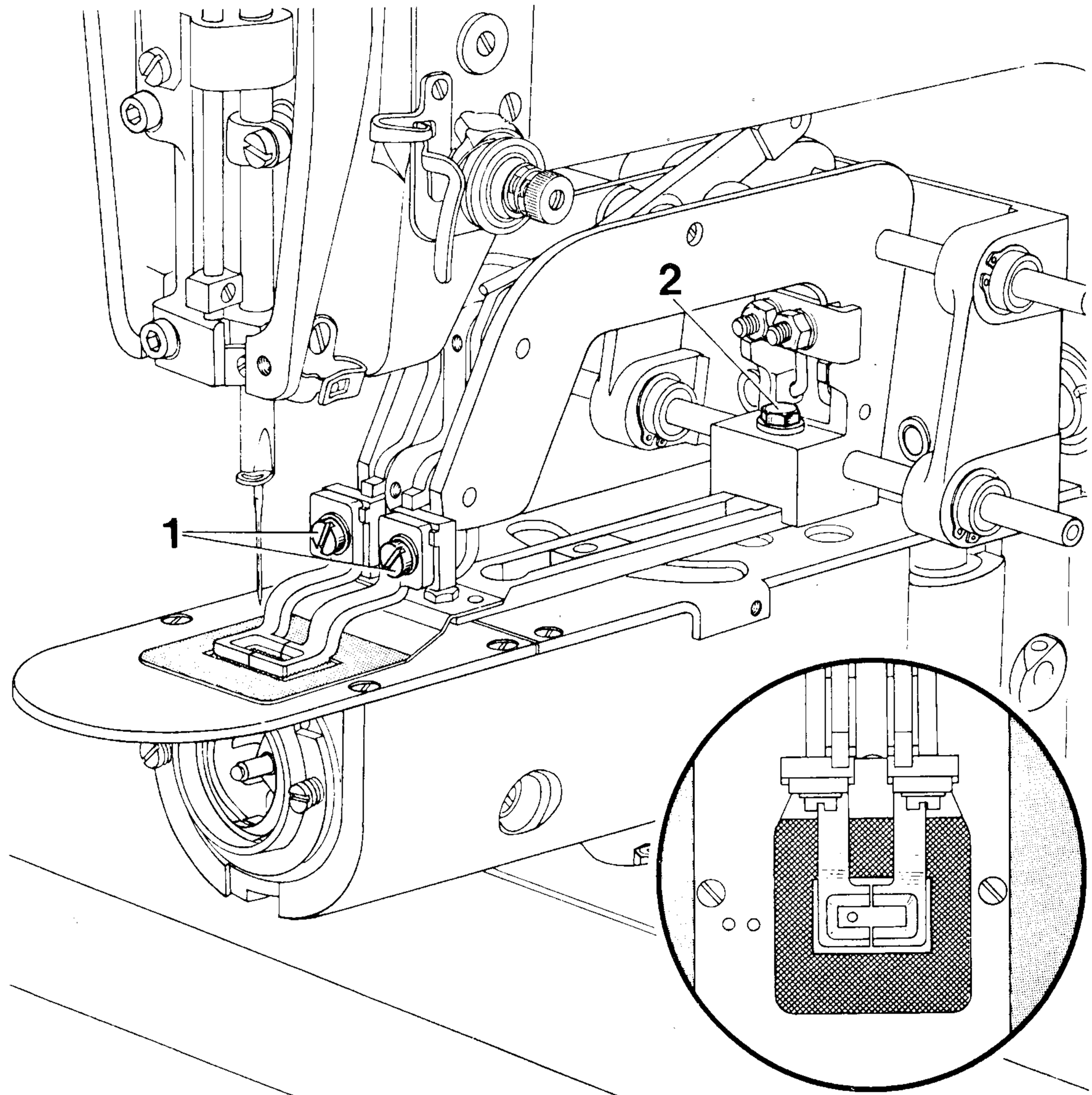

26.0.1 26.0.2

26.1 Attach both clamp feet by means of screws **1** (Fig. 26.0.1). **Adjust them sideways so that each clamp foot can be raised without chafing against the other and that both are centered in the cutout of the feed plate.**

26.2 Loosen hexagon screw **2** in the arch clamp and **adjust the feed bar lengthwise so that the clamp feet cutout is centered in the feed plate cutout in this direction, too** (Fig. 26.0.2).

26.3 Tighten hexagon screw **2** in the arch clamp.

26.4 Check this adjustment (see "Correct setting").

27 Maximum tack size *)

Correct setting: The machine makes a tack of the largest possible size when both screws **1** (or the limiting brackets) have been pushed inwards as far as they will go.

Machine position: Master switch off, end-of-cycle position.

Note: Moving the screws in the opposite direction decreases the tack size accordingly.

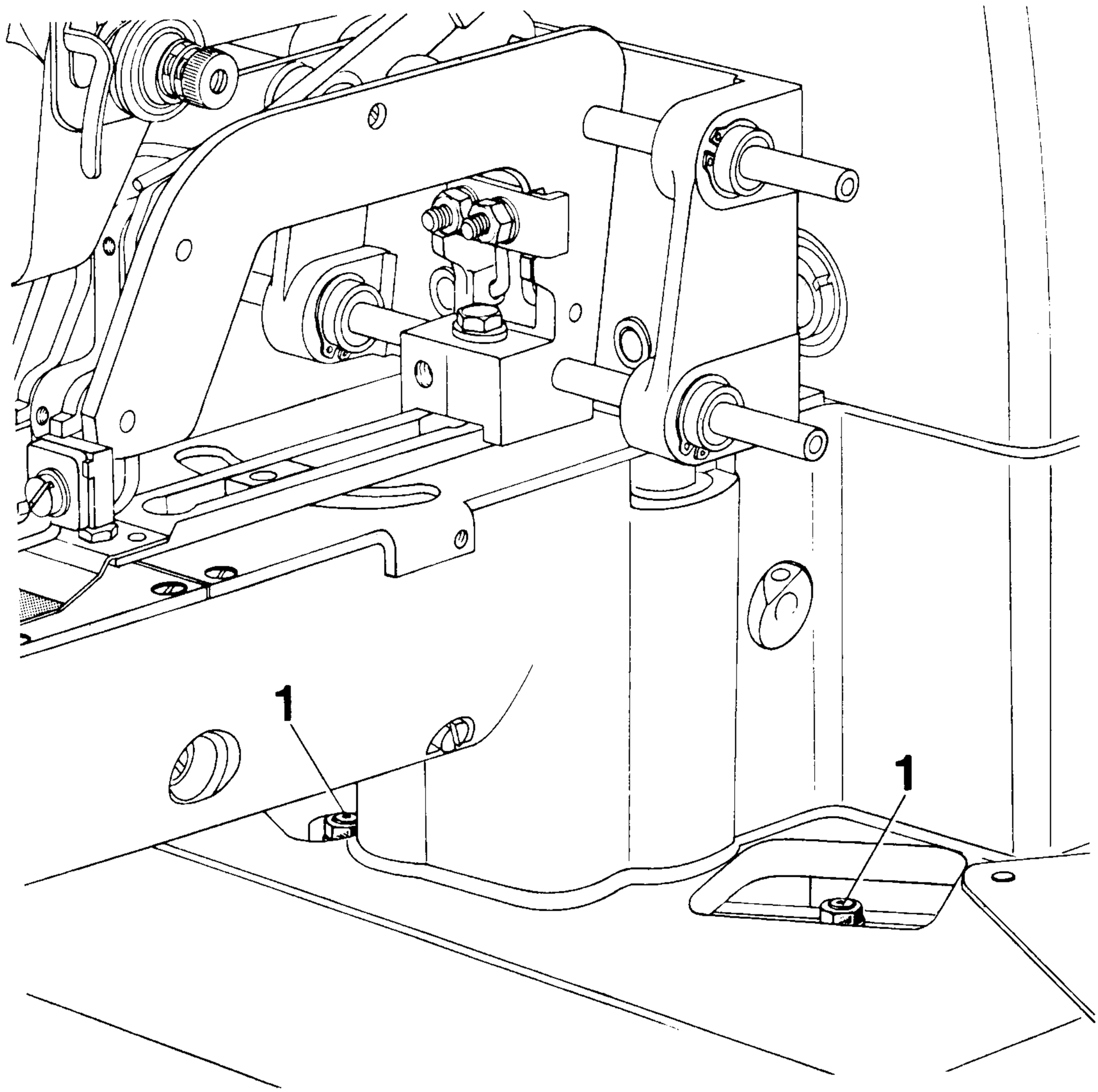

27.0.1

27.1 Open the two covers which are located on the bedplate to the right and left of the cylinder bed.

27.2 Loosen the hexagon nuts on screws **1** (Fig. 27.0.1).

27.3 Push both screws (or the screws with their limiting brackets) inwards as far as they will go. In this position, tighten both nuts again.

*) On subcl. -964/ . . machines, the tack size is regulated by a quick tack size adjustment.

Correct position:

During the lengthwise and crosswise feed motions the needle should clear the inner edges of the clamp feet cutout at the same distance all around.

Machine position: Master switch off, end-of-cycle position, stop mechanism disengaged.

28.0.1

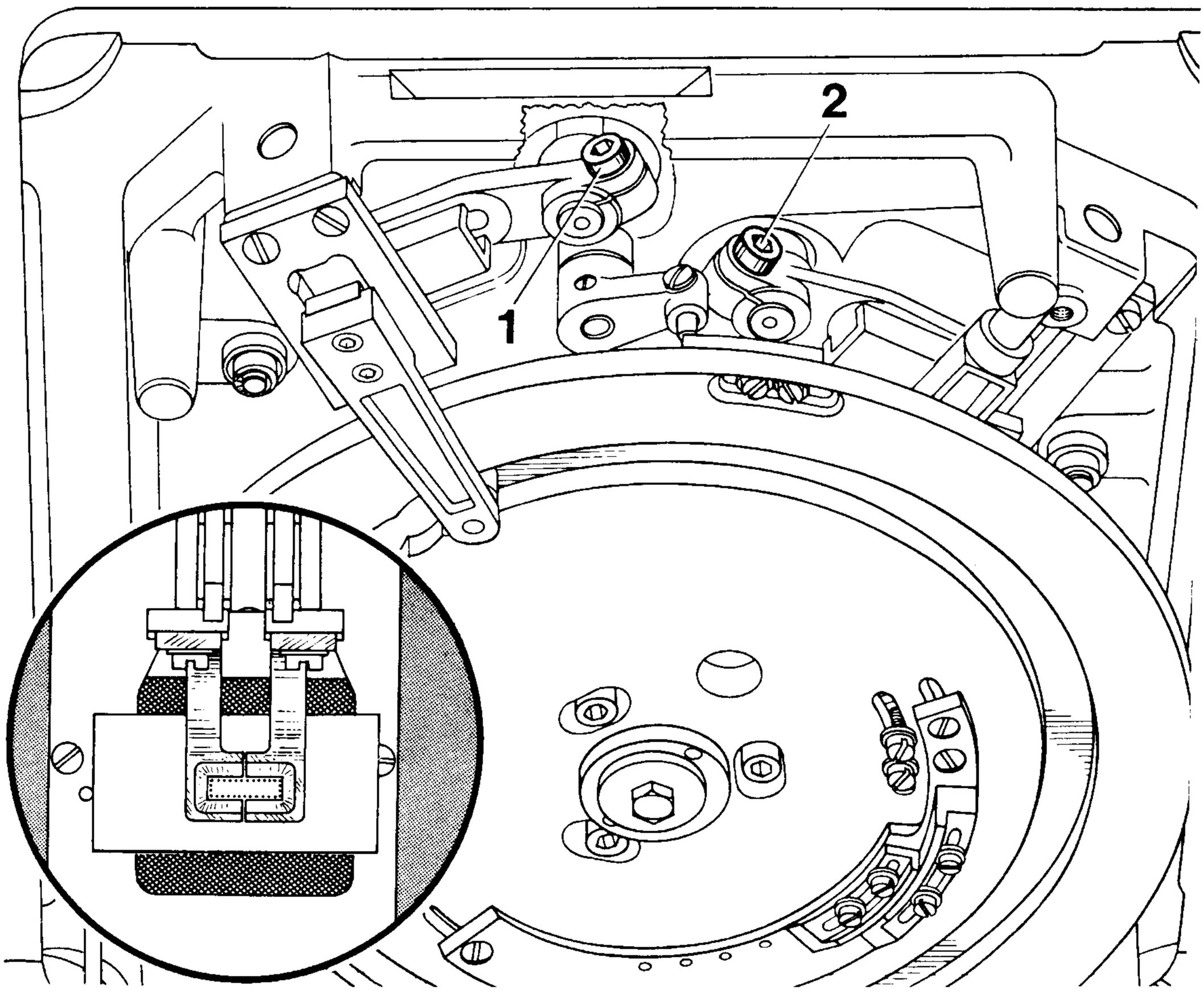

28.0.2

28.1 Make sure the machine is set for its largest tack size. Loosen clamp screw **1** (Fig. 28.0.1) just sufficiently to allow the crank for the **crosswise feed motion** to be moved against resistance.

28.2 Also loosen clamp screw **2** just sufficiently to allow the crank for the **lengthwise feed motion** to be moved against resistance.

28.3 **Operate the starting lever by hand, turn the V-belt pulley in its normal direction, and simultaneously adjust the position of the arch clamp until the needle clears the right and left edges of the clamp feet cutout at the same distance** (Fig. 28.0.2).

28.4 Tighten clamp screw **1** on the left crank.

28.5 Continue turning the V-belt pulley in its normal direction until the machine starts feeding in lengthwise direction.

28.6 **Adjust the position of the arch clamp until the needle also clears the far and near edges of the clamp feet cutout at the same distance.**

28.7 Tighten clamp screw **2** on the right crank.

28.8 Continue turning the V-belt pulley until the machine has completed its cycle and stopped. Then rotate the clutch disc until the stop mechanism is engaged, and the machine is in its starting position again.

28.9 Check this adjustment (see "Correct setting").

29 Needle thread tension

Correct setting:

When the machine makes its first stitch the lower tension mechanism should be activated when the take-up lever is at its lowest point. This tension must be released when the machine is in its locked position.

Machine position: Master switch off, stop mechanism disengaged.

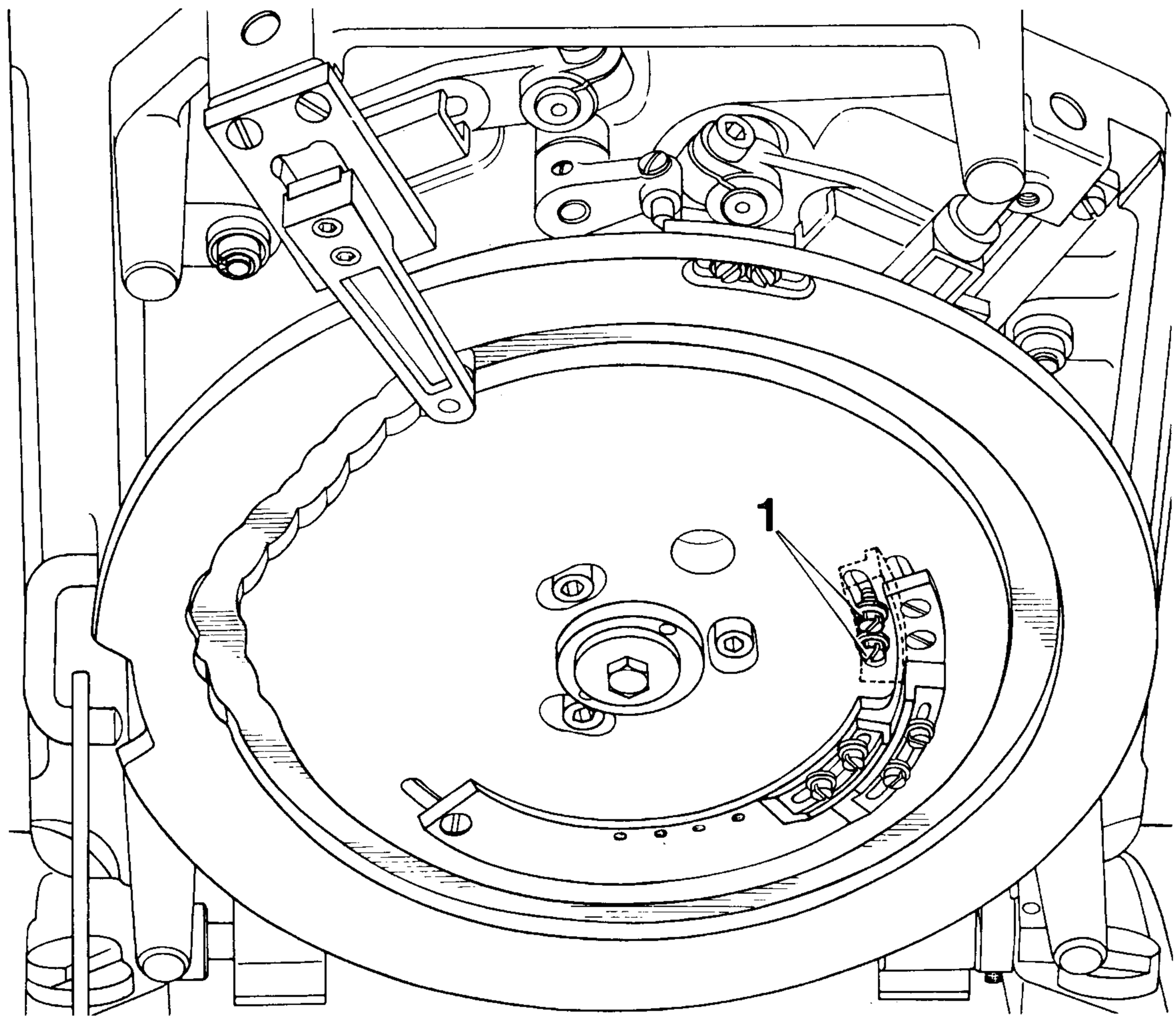

29.0.1

29.1 Operate the starting lever and turn the V-belt pulley in its normal direction until the take-up lever is at its **lowest** point.

29.2 Loosen both screws **1** of the tension release tripping segment on the feed cam (Fig. 29.0.1) and push them down as far as they will go.

29.3 **Push the tension release tripping segment back as far as it will go, i. e. until it contacts the feeler lever.**

29.4 In this position, tighten both screws **1.**

29.5 Again bring the machine to its starting position.

29.6 Check this adjustment (see "Correct setting").

Correct setting:

When the tension discs are separated, the thread check spring should be in line with the bottom edge of the slack thread regulator (see arrow in Fig. 30.0.2).

Machine position: Master switch off, stop mechanism disengaged.

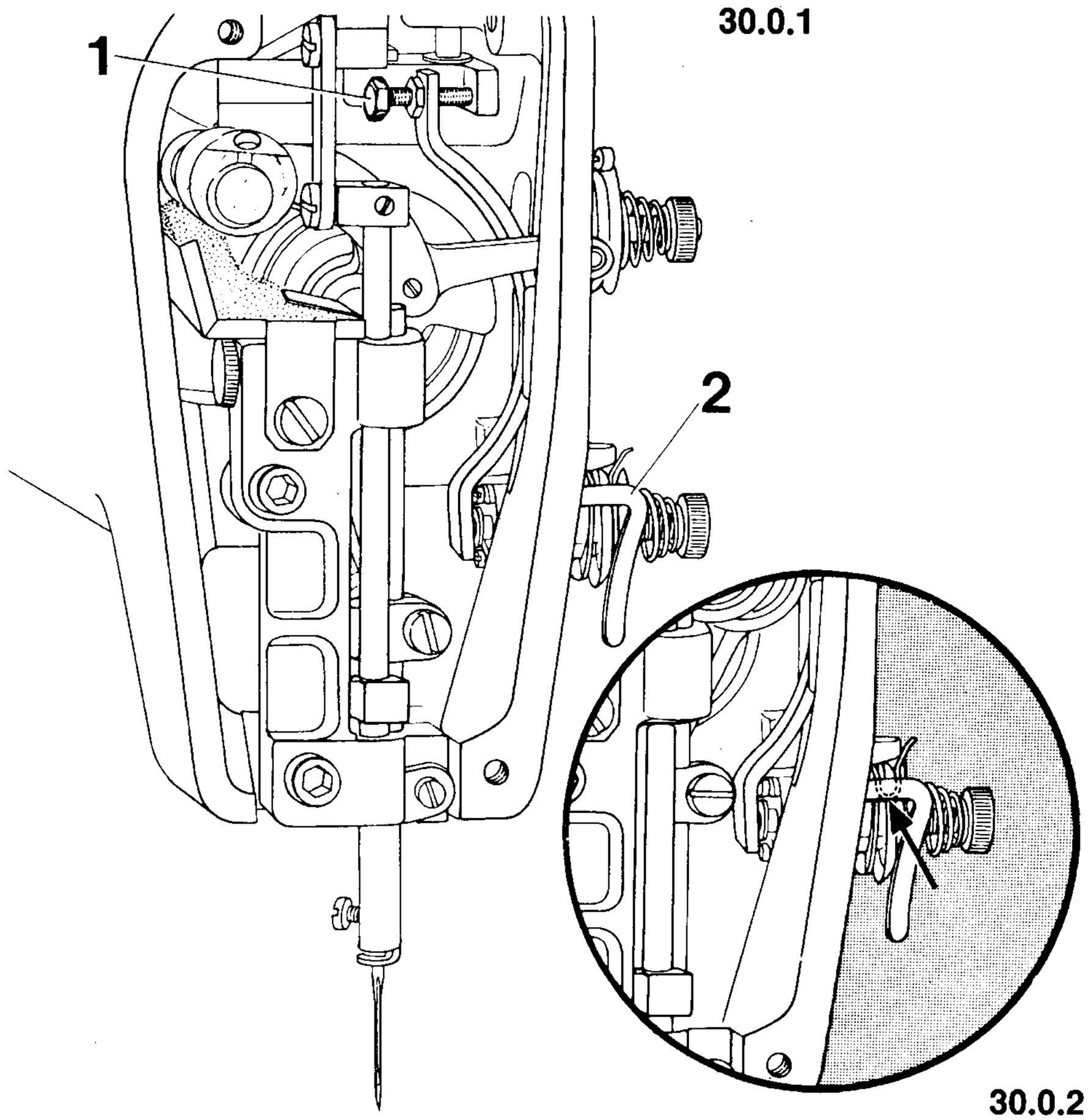

30.0.1

30.0.2

30.1 Operate the starting lever and slightly rotate the V-belt pulley in its normal direction until screw **1** of the tension release lever (Fig. 30.0.1) is accessible.

30.2 In this position, loosen the locknut on screw **1.**

30.3 **Turn screw 1 until the tension discs are separated and the thread check spring is in line with the bottom edge of slack thread regulator 2** (see arrow in Fig. 30.0.2).

30.4 The thread tension should still have a small amount of play, i. e. when you press against the tension release lever, the thread check spring should still move downwards slightly.

30.5 In this position, tighten the locknut on screw **1.**

30.6 Turn the V-belt pulley in its normal direction a few turns. The thread tension must now be fully activated, and there must be a small amount of play between screw **1** and the tension release lever.

30.7 Check this adjustment (see "Correct setting").

30.8 Then bring the machine to its starting position again.

31 Motor speed changing

Correct setting:

After the first stitch has been made, the machine should switch over from slow to high speed. It should again switch to slow speed four stitches before the end of the cycle.

Machine position: Master switch off, end-of-cycle position.

31.0.1

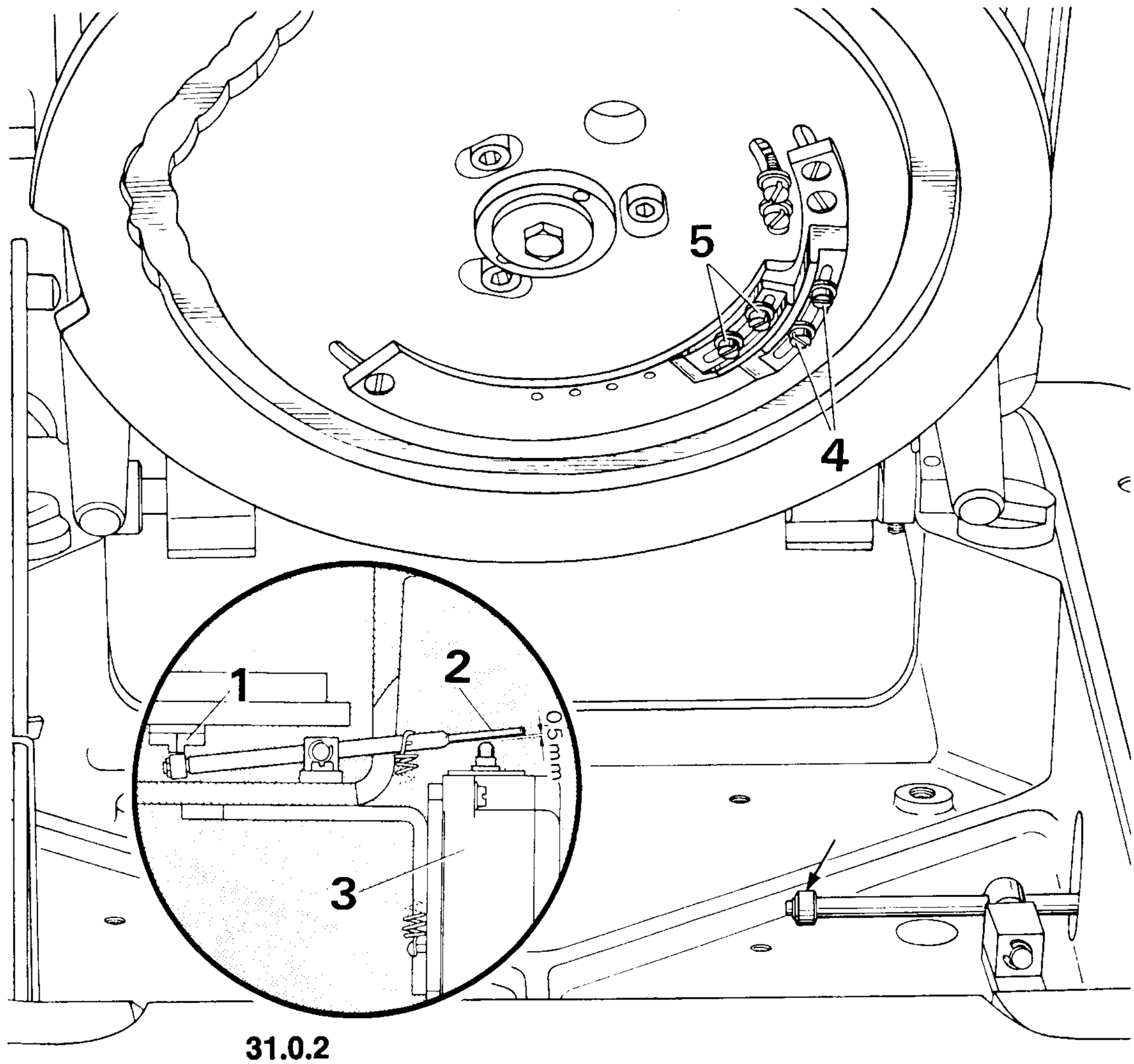

31.0.2

31.1 Check to make sure the machine is in its starting position and switch-over tripping segment **1** has completely depressed the horizontal actuating lever **2** (Fig. 31.0.2). Then loosen the three screws of pole-changing switch **3.**

31.2 **Adjust switch 3 vertically so that there is a clearance of 0.5 mm between actuating lever 2 and the operating stud of switch 3** (Fig. 31.0.2).

31.3 In this position, tighten the three screws of switch **3.**

31.4 Briefly switch on the motor and check its direction of rotation. The motor should turn clockwise, as seen from the front end of the machine.

31.5 If the motor turns counter-clockwise, exchange the wires in the plug.

31.6 Make sure the V-belt is still removed, then switch on the motor.

31.7 **Operate the starting lever by hand and turn the V-belt pulley in its normal direction. As you do this, the motor should switch from slow to high speed after the first stitch has been made.**

31.8 If the motor switches over too early or too late, loosen both screws **4** of the **outer** switch-over tripping segment on the feed cam (Fig. 31.0.1).

31.9 Set the switch-over tripping segment earlier or later, then securely tighten both screws **4.**

31.10 Repeat this adjustment until **the motor switches over from slow to high speed after the first stitch has been made.**

31.11 **Turn the V-belt pulley in its normal direction until the motor switches over from high to slow speed. Continue turning the V-belt pulley and check to make sure the machine makes another four stitches before it is stopped mechanically.**

31.12 If the motor switches over too early or too late, loosen both screws **5** of the **inner** switch-over tripping segment on the feed cam (Fig. 31.0.1).

31.13 Set the inner switch-over tripping segment earlier or later, then securely tighten both screws **5** again.

31.14 Check this adjustment (see "Correct setting").

31.15 Bring the machine to its starting position again.

Correct setting:

When the bobbin winder is engaged, it should be driven reliably by the friction wheel; however when it is disengaged, the friction wheel must not contact the bobbin winder pulley.
The bobbin winder, furthermore, should stop automatically when the thread wound on the bobbin is **1 mm** below its rim.

32.0.1

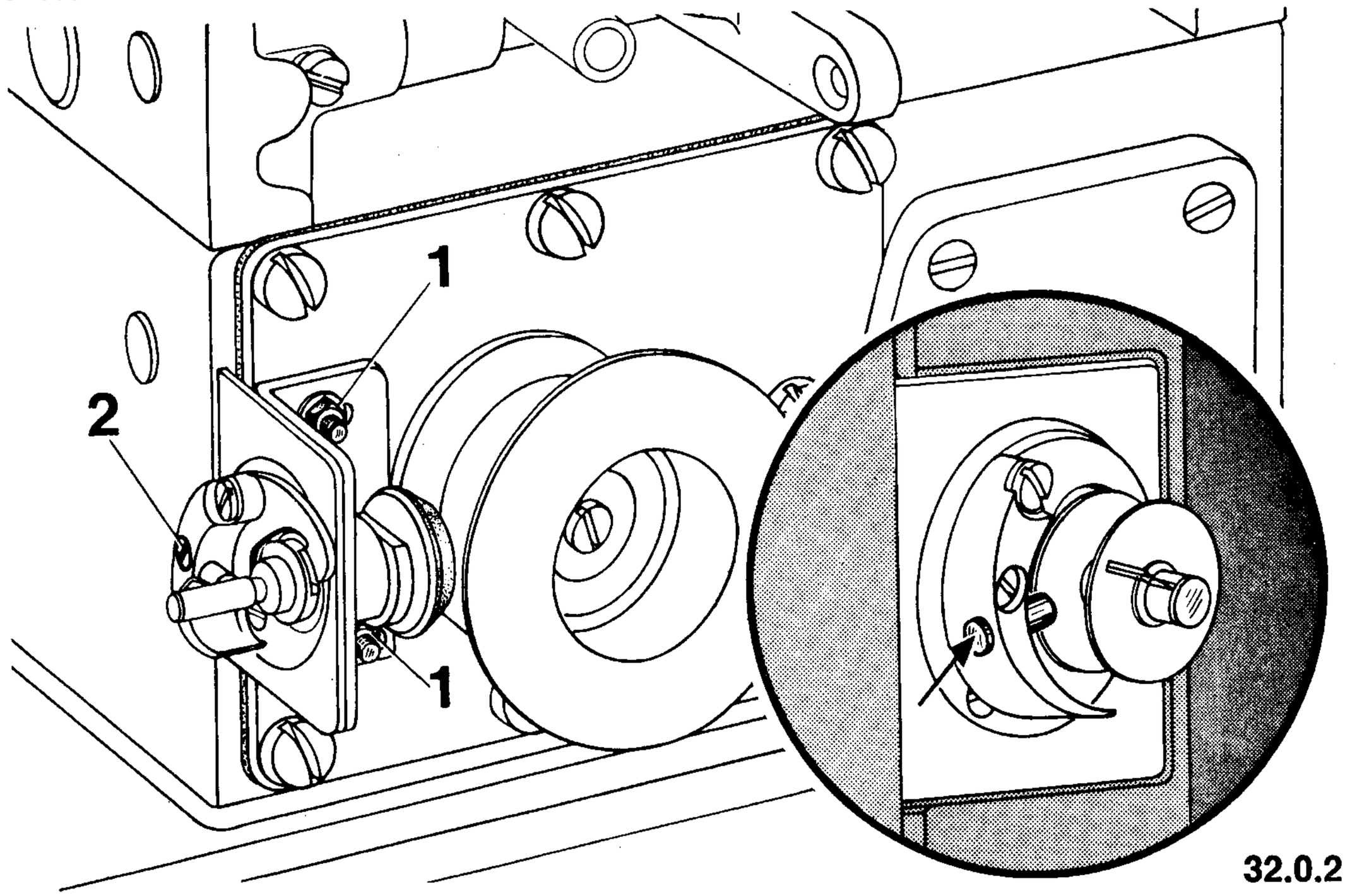

32.0.2

32.1 Replace the mounting plate and the bobbin winder, tightening both nuts **1** just sufficiently to allow the bobbin winder plate to be moved against resistance (Fig. 32.0.1).

32.2 **Adjust the position of the bobbin winder plate so that the bobbin winder pulley will be driven reliably by the friction wheel when the bobbin winder is engaged, but will not be in contact with the friction wheel when the bobbin winder is disengaged.**

32.3 In this position, tighten both nuts **1.**

32.4 Mount the V-belt, replace the belt guard, place an empty bobbin on the bobbin winder spindle, thread the machine for bobbin winding, and start the bobbin winder.

32.5 If too much or too little thread is wound on the bobbin, loosen screw **2** in the stop latch.

32.6 **Adjust the stud on the stop latch** (see arrow in Fig. 32.0.2) **so that the bobbin winder stops when the thread wound on the bobbin is 1 mm below its rim.**

32.7 In this position, tighten screw **2.**

32.8 If the thread on the bobbin has been wound unevenly, adjust the position of the thread guide on the belt guard.

32.9 Check this adjustment (see "Correct setting").

33 Thread wiper

Correct setting:	There should be a lateral clearance of **15 mm** between thread wiper and needle (Fig. 33.0.2). In addition, the thread wiper should pass abt. **1 mm** below the needle point when the lifting lever is operated (Fig. 33.0.3).

Machine position: Master switch off, end-of-cycle position.

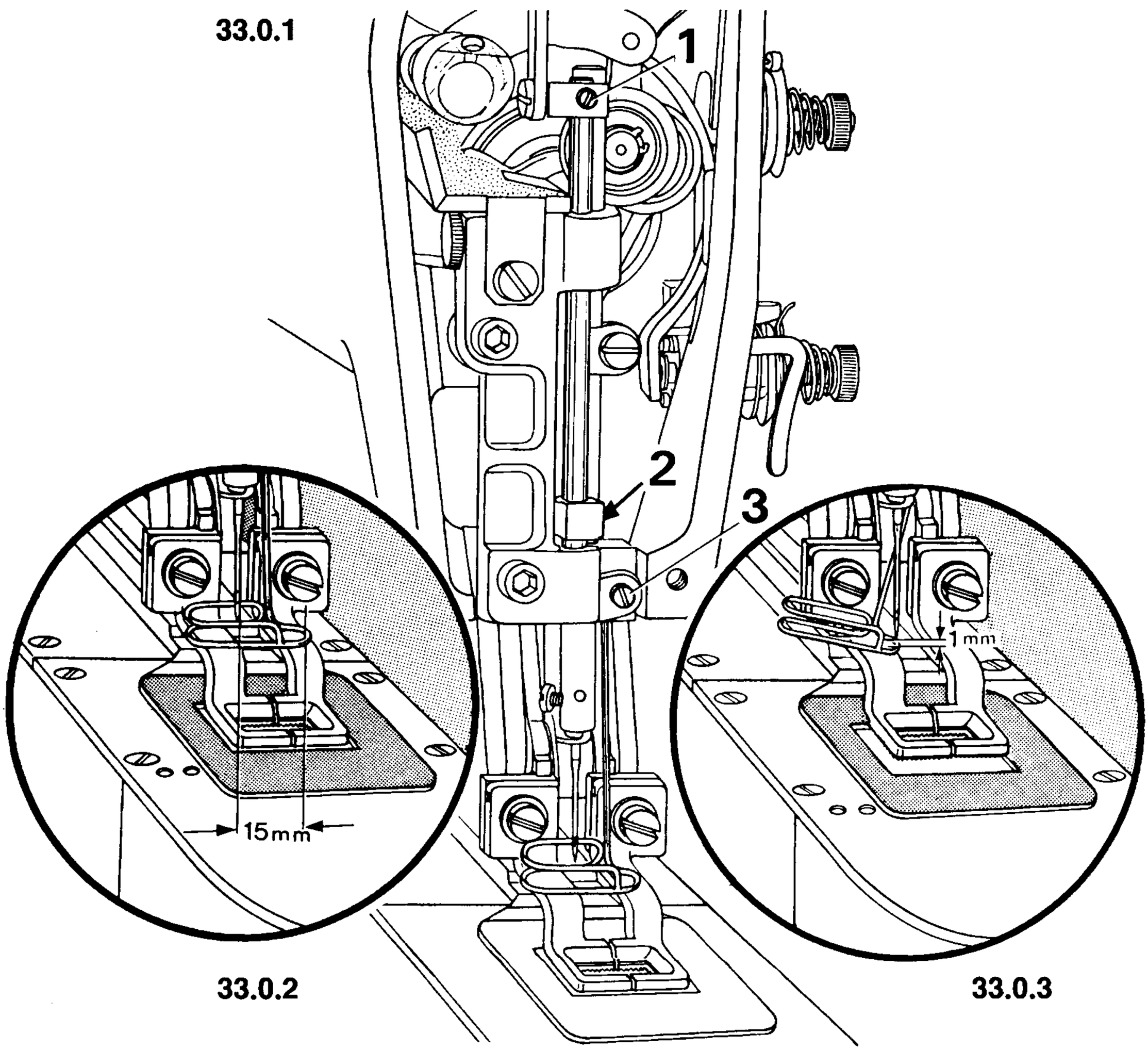

33.1 Screw on the thread wiper.

33.2 Check to make sure the machine is in its starting position, then loosen screws **1** and **2** of the vertical thread wiper rod (Fig. 33.0.1).

33.3 **Adjust the thread wiper rod until there is a lateral clearance of abt. 15 mm between needle and thread wiper (Fig. 33.0.2).**

33.4 In this position, tighten screws **1** and **2.**

33.5 Loosen screw **3** of the thread wiper.

33.6 **Adjust the thread wiper vertically so that it passes abt. 1 mm below the needle point when the lifting lever is operated (Fig. 33.0.3).**

33.7 Tighten screw **3** again.

33.8 Check this adjustment (see "Correct setting").

Correct setting:

When the clamp feet rest on the needle plate, there should be a clearance of abt. **1 mm** between needle bar frame and lifting bracket **1** (Fig. 34.0.2).

Machine position: Master switch off.

34.0.2

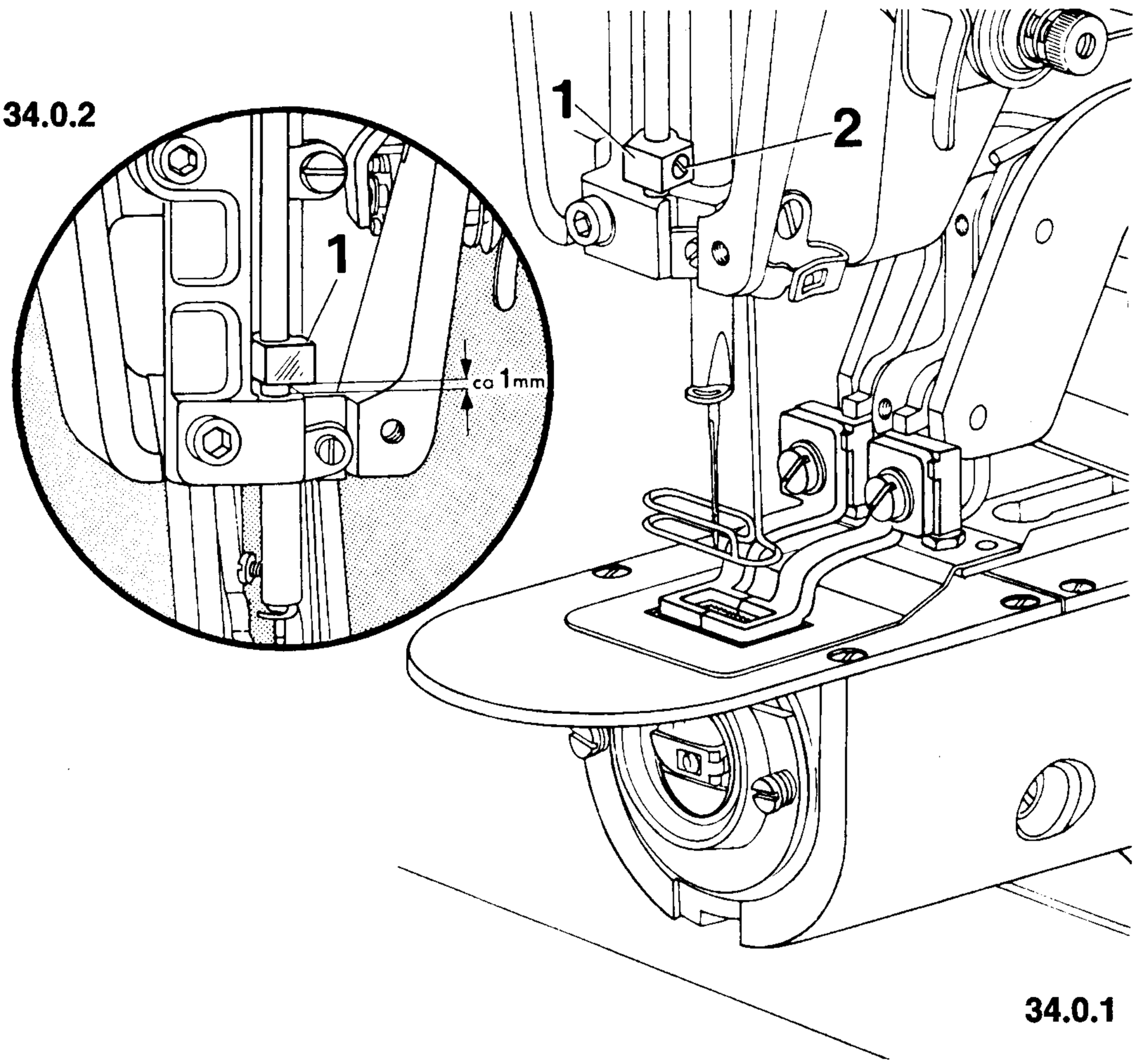

34.0.1

34.1 Loosen screw **2** in lifting bracket **1** on the vertical thread wiper rod (Fig. 34.0.1).

34.2 **Adjust lifting bracket 1 so that there is a clearance of abt. 1 mm between needle bar frame and bracket** (Fig. 34.0.2).

34.3 In this position, tigthen screw **2.**

34.4 Replace the face cover, making sure that the eye guard is swung to the left when the clamp feet are raised.

34.5 Check this adjustment (see "Correct setting").

35 Final worksteps

35.1 Screw on the cover on the side of the machine arm.

35.2 Reconnect both chains.

35.3 Screw on the cover strip above the front slide block.

35.4 Place the bobbin case with a full bobbin in the shuttle, making sure that the thread is pulled through the hole in the position finger so that its end protrudes abt. **3 cm.**

35.5 Screw on the cylinder bed cap and the cap retaining spring.

35.6 Thread the machine and place material under the clamp feet.

35.7 Regulate the upper tension so that the thread loop will still be passed evenly around the shuttle even if the lower tension mechanism is released.

35.8 Switch on the machine and make a few sewing and trimming tests.

36 Conversion to other subclasses
(with different gear ratios)

36.1 Make sure the machine is in its starting position, i. e. at the cycle end position. Take out both screws of the roller lever located under the bedplate near its left front corner, and strip the roller lever.

36.2 Take out the hexagon screw in the middle of the feed cam and remove the cap washer underneath.

36.3 Turn the eccentric bushing slightly toward the left, i. e. counter-clockwise, and strip both the feed cam and the eccentric bushing.

36.4 Take out the three allen screws on the driving spur gear on the vertical shaft of the machine and remove the spur gear.

36.5 Insert the spur gear having another gear ratio (subclass-dependent) and secure it in position with the three allen screws.

36.6 Make sure that you also change the feed cam (which is subclass-dependent, too). Then make the adjustments described in Sections 19 through 31 inclusive.

37 **Bobbin thread puller and knife** (Using gauge No. 61-111 635-21)

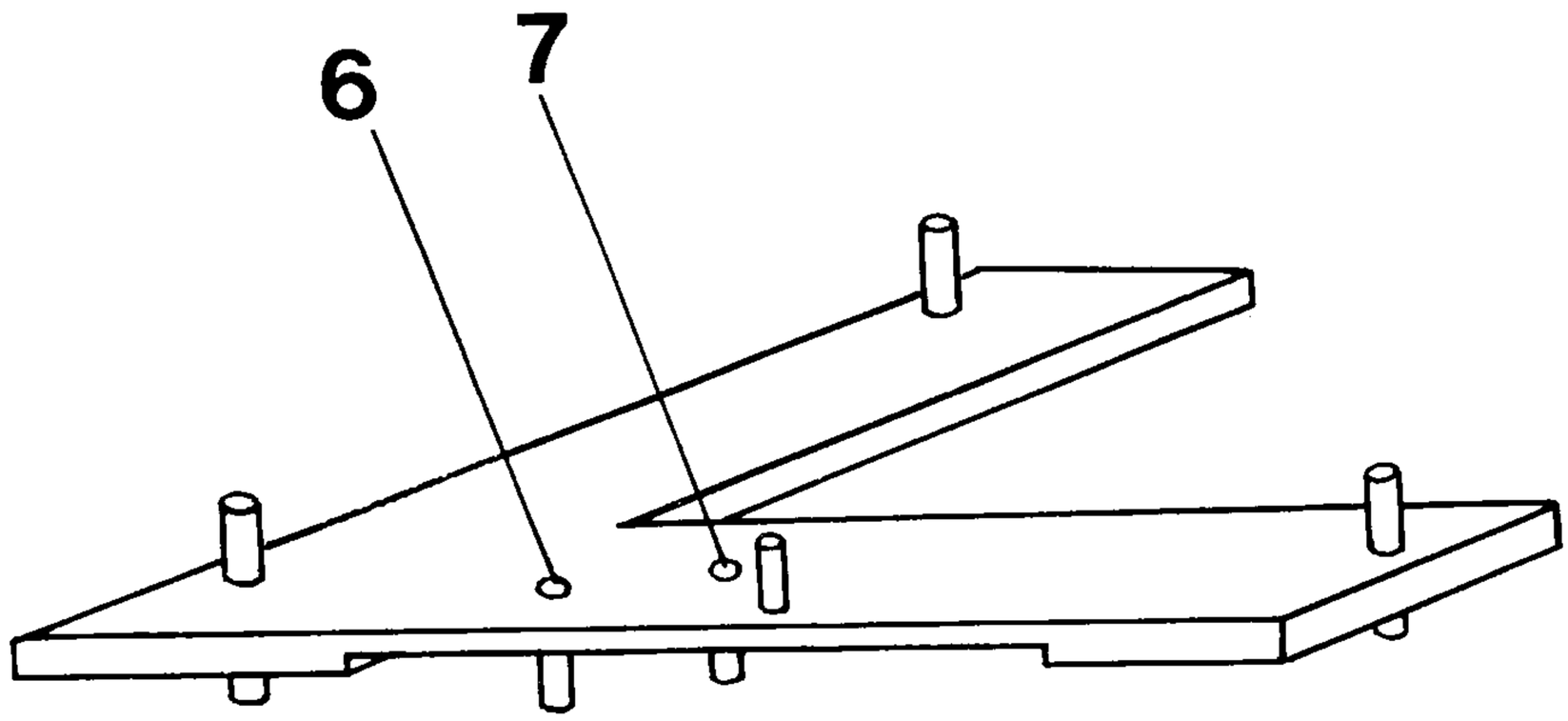

37.0.1

37.1 Loosen clamp screw **1** of needle thread catcher **2** (Fig. 18.0.1)) swing the latter toward the left, and finger-tighten clamp screw **1.**

37.2 Loosen screw **3** just sufficiently to allow knife **4** and bobbin thread puller **5** to be moved against resistance.

37.3 Operate the clamp lifting lever to bring knife **4** and bobbin thread puller **5** to their forward point of reversal. In this position, block the clamp lifting lever.

37.4 Turn the gauge so that the pins marked "Unterfadenzieher" and "Messer" face downwards and insert its outer pins into the holes of the needle plate.

37.5 **Bring the bobbin thread puller into contact with the pin marked "Unterfadenzieher" and the knife with the pin marked "Messer".**

37.6 In this position, tighten screw **3** of the knife and the bobbin thread puller. Make sure as you tighten the screw that the bobbin thread puller is positioned as close above the shuttle race as possible, without actually touching it, thus eliminating thread jamming.

38 **Needle thread catcher setting** (Using gauge No. 61-111 635-21)

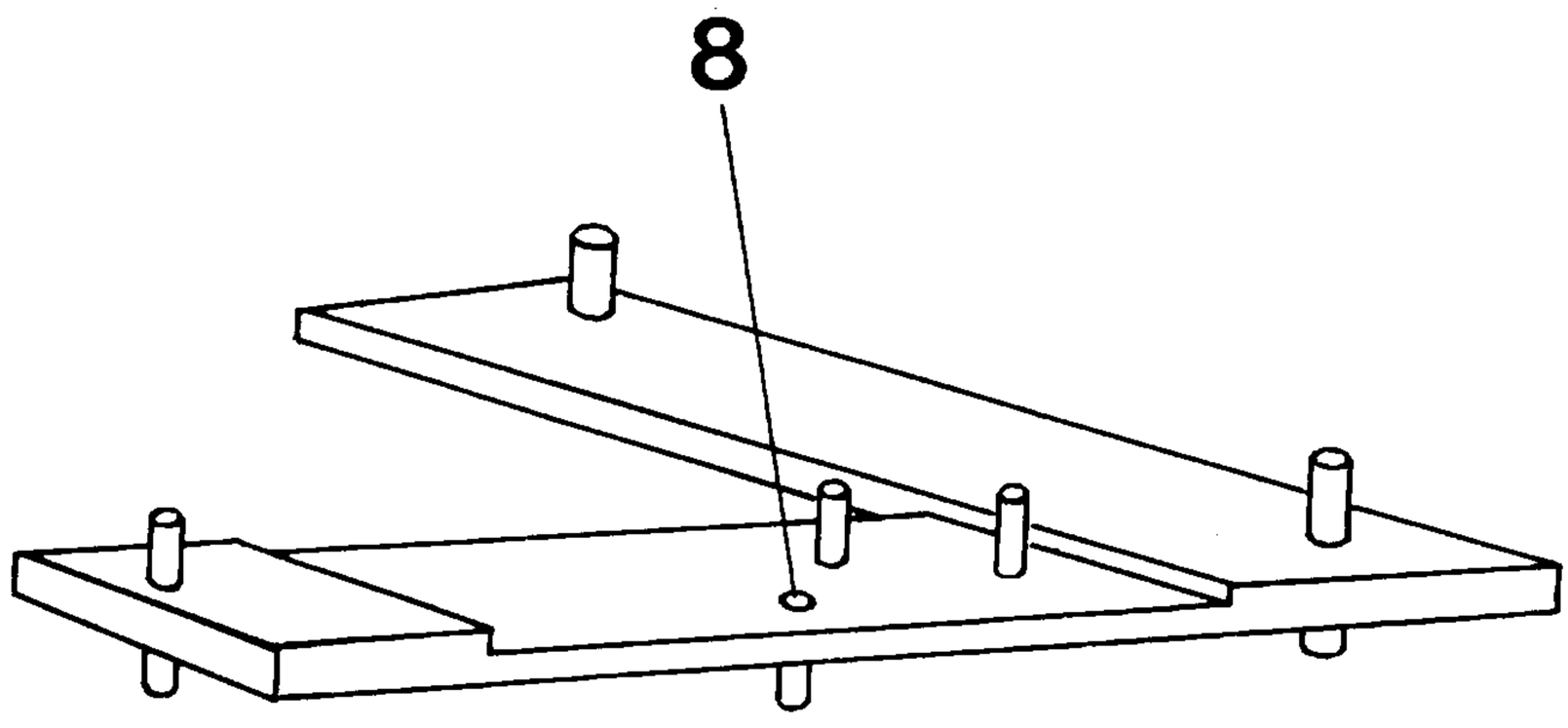

38.0.1

38.1 Check setting specified in Section 22 and, if necessary, adjust.

38.2 Bring the machine to its starting position and check to make sure the thread catcher tripping stud is positioned at the highest point of the tripping segment.

38.3 In this position, loosen clamp screw **1** of the needle thread catcher (Fig. 23.0.1) and swing the latter away.

38.4 Turn the gauge so that the pin marked "Fadenfänger" face downwards and insert its outer pins into the holes of the needle plate.

38.5 **Bring the needle thread catcher into contact with the pin marked "Fadenfänger".**

38.6 In this position, tighten clamp screw **1** and remove the gauge.

38.7 Adjust the needle thread catcher vertically so that it passes freely between knife and bobbin thread puller without touching any of these parts. Securely tighten clamp screw **1.**

38.8 Operate the starting lever and turn the V-belt pulley until the thread catcher tripping stud has cleared the tripping segment.

38.9 Make adjustments described in paras. 23.6 to 23.9.

Contents

		Page
1	Preparations for adjustment	1
2	Drive pulley and clutch disc	2
3	Starting latch	3
4	Forked clutch lever	5
5	Clamp lifting lever	7
6	Knife actuating rod	8
7	Locking lever	9
8	Micro switches	10
9	Needle position	11
10	Dismantling (for the following adjustments)	12
11	Shuttle-to-needle clearance	15
12	Endwise position of shuttle driver shaft	16
13	Shuttle driver finger	17
14	Shuttle driver play	18
15	Shuttle driver timing	19
16	Shuttle race	21
17	Needle bar height	22
18	Bobbin thread puller and knife	23
19	Mounting the feed cam	24
20	Feed timing	25
21	Stop tripping segment	26
22	Thread catcher crank	27
23	Thread catcher setting	28
24	Thread catcher timing	29
25	Stationary knife and trimming test	30
26	Clamp feet	31
27	Maximum tack size	32
28	Centering the seam pattern	33
29	Needle thread tension	34
30	Tension release lever	35
31	Motor speed changing	36
32	Bobbin winder	38
33	Thread wiper	39
34	Eye guard	40
35	Final worksteps	41
36	Conversion to other subclasses	42

Supplement

37	Bobbin thread puller and knife (Using gauge No. 61-111 635-21)	43
38	Needle thread catcher setting (Using gauge No. 61-111 635-21)	44

PFAFF®

Innovation made by PFAFF

Pfaff, D-6750 Kaiserslautern, Postfach 3020/3040, Telefon (0631) 200-0 Telex 45753
Telefax (0631) 17202

Rohr · Gedruckt in der Bundesrepublik Deutschland · Printed in West Germany · Imprimé en R.F.A. · Impreso en la R.F.A.

296-12-13087

engl. 3/89